HGUL USER MANUAL

ELEPHANT
LIFTING PRODUCTS™

ATS
PNEUMATIC

CONTENTS

This operation manual covers the following Elephant Trolley and Hoists:

- HGUL-0.5
- HGUL-1
- HGUL-2
- HGUL-3
- HGUL-5
- HGUL-10
- HGUL-15
- HGUL-20
- HGUL-30
- HGUL-40

It must be read carefully and in its entirety before operating any hoist.

Please enter the Serial No. of your ELEPHANT hoist/trolley here

Serial No.

1 WARRANTY

ELEPHANT LIFTING PRODUCTS, LLC warrants to the user its Hoists, and Trolleys to be free from defects in material and workmanship for a period of one year from the date of purchase.

ELEPHANT will at its discretion repair without cost to the user (including parts and labour charges) for any product found to be defective. ELEPHANT may, at its option, replace such product(s) and refund the purchase price less a reasonable allowance for handling in exchange for the defective product(s). All repaired and replaced product(s) are warranted for the remainder of the original warranty period.

If any product proves defective within its original one-year warranty period, it must be returned to ELEPHANT LIFTING PRODUCTS, LLC with proof of purchase and the original test certificate.

This warranty does not apply to products which ELEPHANT has determined to have been misused, abused and improperly maintained by the user or where the malfunction or defect was attributed to using non-genuine ELEPHANT parts.

ELEPHANT LIFTING PRODUCTS, LLC makes no other warranty and its maximum liability is limited to the purchase price of the product and in no event, will ELEPHANT LIFTING PRODUCTS, LLC be liable for any consequential, indirect, incidental or special damages of any nature arising from the use of the product whether based on contract or otherwise.

It is ELEPHANT LIFTING PRODUCTS, LLC policy to promote safety of all personnel in the workplace. All products manufactured are thoroughly checked, packed and inspected before dispatch. Any loss or damage which occurs during shipment while en-route must be reported to ELEPHANT immediately. Should any item be delivered to the customer in apparent good condition, but upon opening the container, loss or damage has taken place while in transit; notify ELEPHANT LIFTING PRODUCTS, LLC immediately.

Should any items be delivered back to ELEPHANT LIFTING PRODUCTS, LLC all transport costs will be on the account of the user.

These instructions are prepared by ELEPHANT LIFTING PRODUCTS, LLC for the purpose of maintenance, repair and the use of its hoists.

No responsibility for failure of equipment due to manufacturing procedure will be assumed if these instructions are not carried out. Only original ELEPHANT supplied spares are to be used in all repairs.

2 SAFETY INFORMATION

The user/owner and all other relevant personnel shall comply with local regulations as applicable.

NOTICE

This manual is written to be applicable to ELEPHANT hoists, or ELEPHANT hoists mounted on/integral to ELEPHANT trolleys

THIS MANUAL MUST BE READ BEFORE USING OR REPAIRING THESE PRODUCTS.

This manual contains important safety, installation, operation, maintenance and repair information. Make this manual available to all persons responsible for the operation, installation, maintenance and repair of these products.

DANGER

Do not use this hoist for lifting, supporting, or transporting people or lifting or supporting loads over people.

Always operate, inspect and maintain this hoist in accordance with South African Bureau of Standards Specification number SANS500 and SANS 1594 and any other safety codes or procedures relevant to the industry in which the hoist is being used. Testing of chain hoists must only be carried out by the competent person contemplated in SANS 500.

The Occupational Health and Safety Act and Mine Health and Safety Act and other recognized safety sources make a common point: Employees who work near cranes or assist in hooking on or arranging a load should be instructed to keep out from under the load. From a safety standpoint, one factor is paramount: conduct all lifting operations in such a manner that if there were an equipment failure, no personnel would be injured. This means keep out from under a raised load and keep out of the intended path of any load.

ELEPHANT industrial and mining hoists are manufactured in accordance with the latest ISO9001 standards.

The Occupational Safety and Health Act of 1993, section 10 states:
(1) Any person who designs, manufactures, imports, sells or supplies any article for use at work shall

ensure, as far as is reasonably practicable, that the article is safe and without risks to health when properly used and that it complies with all prescribed requirements.

(2) Any person who erects or installs any article for use at work on or in any premises shall ensure, as far as is reasonably practicable, that nothing about the manner in which it is erected or installed makes it unsafe or creates a risk to health when properly used.

(3) Any person who manufactures, imports, sells or supplies any substance for use at work shall:

- Ensure, as far as is reasonably practicable, that the substance is safe and without risks to health when properly used; and
- Take such steps as may be necessary to ensure that information is available with regard to the use of the substance at work, the risks to health and safety associated with such substance, the conditions necessary to ensure that the substance will be safe and without risks to health when properly used and the procedures to be followed in the case of an accident involving such substance.

(4) Where a person designs, manufactures, imports, sells, or supplies an article or substance for or to another person, and that other person undertakes in writing to take specified steps sufficient to ensure, as far as is reasonable practicable, that the article or substance will comply with all prescribed requirements and will be safe and without

risks to health when properly used, the undertaking shall have the effect of relieving the first mentioned person from the duty imposed upon him by this section to such an extent as may be reasonable having regard to the terms of the undertaking.

It is the owner's and user's responsibility to determine the suitability of a product for any particular use. It is recommended that all applicable industry, trade association and legislation be checked. Read all operation instructions and warnings before operation.

This manual has been produced by ELEPHANT to provide agents, fitters, and company personnel with the information required to install, operate, maintain and repair the products described herein.
It is extremely important that fitters and operators be familiar with the servicing procedures of these products, or similar products, and are physically capable of conducting the procedures. These personnel shall have a general working knowledge that includes:

1. Proper and safe use and application of fitter's common hand tools as well as special or recommended tools.
2. Safety procedures, precautions and work habits established by accepted industry standards.

ELEPHANT cannot know of, nor provide, all the procedures by which product operations or repairs may be conducted and the hazards and/or results of each method. If operation or maintenance procedures not specifically recommended by the manufacturer are conducted, it must be ensured that product safety is not endangered by the actions taken. If unsure of an operation or maintenance procedure, personnel should place the product in a safe condition and contact supervisors for technical assistance.

This operation manual contains important information for the safe, proper and efficient operation of ELEPHANT hoists. Observance of the manual helps to avoid hazardous situations, to reduce repair costs and downtimes, and to ensure the specified service life of the ELEPHANT Hoist.

This manual refers to existing legal requirements and engineering practices as known when this document was written. Should any such legislation or practice change or be "enlarged" upon then due consideration must be taken. Various standards have been used to assist in compiling this document and will be listed where applicable, however, it is ultimately the responsibility of the user to ensure all local requirements are met.

The instructions given in this manual must be interpreted and applied using sound judgment.

Always keep the manual readily available at the location where the ELEPHANT hoist/trolley is being used.

All persons charged with operating, maintaining or repairing ELEPHANT hoists/trolleys must read and follow the instructions in this manual.

2.1 For Hoists used outside of the Republic of South Africa:

The user/owner and all other relevant personnel shall comply with local regulations as applicable. Special regulations may apply when incorporating hoists into other installations or using hoists under unusual conditions.

Some suggested resources are listed below. This should not be considered an exhaustive list.

It is the responsibility of the owner/user to install, inspect, test, maintain, and operate a hoist in accordance with ANSI/ASME B30.16, "Safety Standard for Overhead Hoists" and OSHA regulations. If the hoist is installed as part of a total lifting system, such as an overhead crane or monorail, it is also the responsibility of the owner/user to comply with the applicable ANSI/ASME B30 volume that addresses that type of equipment.

It is the responsibility of the owner/user to have all personnel that will install, inspect, test, maintain, and operate a hoist read the contents of this manual and applicable portions of ANSI/ASME B30.16, "Safety Standard for Overhead Hoists"

and OSHA Regulations. If the trolley is installed as part of a total lifting system, such as an overhead crane, the applicable ANSI/ASME B30 volume that addresses that type of equipment must also be read by all personnel.

If the trolley owner/user requires additional information, or if any information in the manual is not clear, contact ELEPHANT or the distributor of the hoist. Do not install, inspect, test, maintain, or operate this hoist unless this information is fully understood.

A regular schedule of inspection of the hoist in accordance with the requirements of ANSI/ASME B30.16 should be established and records maintained.

2.2 Organizational Safety Measures

The use of powerful lifting equipment is subject to certain hazards that cannot be overcome by mechanical means but only by the exercise of intelligence, care and common sense. It is therefore essential that personnel involved in the use and operation of this equipment must be competent, careful, physically and mentally qualified, and trained in the safe operation of lifting equipment and the handling of loads. Serious hazards exist such as; overloading, dropping, or slipping of the load caused by improper hitching or slinging, obstructing the free passage of the load and using equipment for a purpose/or in an environment for which it was not intended or designed. The above can lead to fatal consequences.

Operators of ELEPHANT Hoists are under obligation to ensure safe and hazard-free operation. This can be achieved, in part, through the following measures:

- Keep the operation manuals available at the hoist operating site,
- Perform regular training,
- Perform regular inspections (at least once annually) see Section 7,
- Implement an inspection log and make regular accurate entries,
- regularly check personnel for safety and hazard awareness during work.

2.3 Competent Person

The hoist/trolley must be operated, inspected, maintained, and repaired under the supervision of a competent person:

1. Who is qualified by virtue of their knowledge, training, skills and experience to organize the work and its performance.

2. Who is familiar with the legal requirements, occupational safety, and accident prevention regulations which apply to the work to be performed.

3. Who has been trained to recognize and assess any potential or actual danger to health and safety in the performance of the work.

Any individual using the hoist/trolley has the responsibility to:

- follow the operating instructions of their workplace
- Comply with health and safety and accident prevention regulations.
- Ensure that they are properly informed regarding working with hazardous materials.
- Follow the safety instructions set out in the operation manuals.

2.4 Operating Environment

ELEPHANT LIFTING PRODUCTS, LLC fully realizes the importance of proper design factors, minimum and maximum sizes and other limiting dimensions of the chain and its fastenings, sprockets and similar equipment all of which are designed with safety in mind.

The condition of lifting equipment can be affected by the environments it is used in. This may cause corrosion or wear and other effects unique to its specific application. In light of this, it is the responsibility of the owner to ensure the hoist is inspected, maintained, and repaired under the supervision of a competent person as described in Section 2.3

2.5 Precaution Signs

Throughout this manual there are steps and procedures which, if not followed, may result in injury, death, and/or destruction to property. The following signal words are used to identify the level of potential hazard.

DANGER

Danger is used to indicate the presence of hazard which will cause ***severe*** injury, death or substantial property damage if the warning is ignored.

WARNING

Warning is used to indicate the presence of a hazard which ***can*** cause ***severe*** injury, death, or substantial property damage if the warning is ignored.

CAUTION

Caution is used to indicate the presence of a hazard which ***will*** or ***can*** cause minor injury or property damage if the warning is ignored.

NOTICE

Notice is used to notify people performing operation, installation, inspection and maintenance information which are important but not hazard-related.

2.6 Safety Summary

DANGER

- **Never allow any person to sit on or stand under the hung load. Always keep out of the intended path of any load.**
- **Ensure that the Hoist is free from load, before performing any maintenance.**
- **Installation, repair and maintenance of the Hoist must be performed only by competent personnel.**
- **Ensure that the cumulative load does not exceed the rated capacity of the Hoist, factors to be considered include rigging equipment, and dynamic loads.**
- **Ensure that the structure to which the Hoist/trolley is attached and any load attaching device(s) used in conjunction with the Hoist/trolley can handle the static and dynamic load(s), when the hoist is lifting and lowering the rated load. (if in doubt, consult a registered professional structural engineer).**
- **ELEPHANT hoists may only be used in an ATEX environment if it conforms to the specific declaration made on the hoists name plate. Contact ELEPHANT for further information if any ambiguity exists. See Section 16 for further information.**

WARNING

- **Never attempt to use the Hoist if its safety Latch has been broken.**
- **Never remove labels or name plate from the Hoist.**
- **Never use any mechanical operating forces other than manual pulling force on chain block hoists.**
- **Do not drop, throw, or drag the Hoist/Trolley.**
- **Before installing the Trolley, ensure that the Hoist is not obstructed, and that it will move freely for the intended work.**
- **Always, keep the Hoist clean.**
- **Never leave a Hoist with a hung load and ensure that stoppers are installed at the end of the beam.**
- **Do not use the Hoist for lifting or transporting people and/or lifting or supporting loads over people.**
- **Never use twisted, cut, added or damaged load chain. Damage can present as distortion, cracks, excessive elongation, corrosion or wear.**
- **Always, perform an inspection before the start of work.**
- **Only original ELEPHANT supplied spares are to be used in all repairs.**
- **Never modify any part of the Hoist**

NOTICE

Lifting equipment is subject to different regulations in each country. These regulations may not be specified in this manual.

Whenever a conflict arises between the contents of this manual and any other applicable legislation, standard or procedure, the more stringent of the two must be applied.

If you have any questions concerning the operation of ELEPHANT hoists/trolleys which are not addressed in this operation manual, please contact us at the following address:

ELEPHANT LIFTING PRODUCTS, LLC
38381 N Robert Wilson Rd, Suite A
Gonzales, Louisiana 70737
USA
Phone (225) 644-6113
Fax (225) 644-6695
e-mail: sales@elephantlifting.com

3 PRODUCT INFORMATION

3.1 Identification

The nameplate mounted on the hoist/trolley identifies the type of ELEPHANT hoist/trolley and contains important rating data.

3.2 Main Components

In general, ELEPHANT hoists consist of the following components:

- Drive
- Gearbox
- Top Block (with hook/lug/rigid trolley mount)
- Bottom Block (with hook/lug)
- Chain
- Chain container
- Hand chain
- Certain ELEPHANT hoists can/must be coupled with trolleys.

In general, ELEPHANT Trolleys consist of the following main components:

- Side plates with axles
- Rolling wheels
- Distance spacers
- Crossheads
- Drive for running geared wheels
- Gearbox
- Anti-drop plates

3.3 Product Description

ELEPHANT hoists use a pneumatic, hydraulic, or manual power source to lift and lower loads. To do this the hoist is suspended from a rigid structure, by a top hook or lug.

To traverse loads, ELEPHANT hoists can be suspended or built into ELEPHANT trolleys.

The hoist is suspended with its upper lug in the load bolt or load eye of the trolley.

ELEPHANT trolleys are moved according to their construction:

- hand chain trolleys by winding the hand chain
- Motorized trolleys by actuating the control of the traversing motor

Note: The track width of some ELEPHANT trolleys can be adjusted within a certain range. If you want to use your trolley on a girder profile different to the one originally specified, please contact us.

ELEPHANT trolleys are fitted with anti-lift and anti-drop devices.

These form-fitting devices offer additional safety measures and prevent the trolley from falling down regardless of the function of the running wheels and from climbing up the girder flange.

3.4 Technical specifications

Technical specifications, including specification drawings and exploded views are supplied by ELEPHANT separately to this manual, and are available on request.

3.5 Intended use

In general ELEPHANT Hoists are intended to be used exclusively for lifting and lowering loads within the specified load-carrying capacities.

When coupled with ELEPHANT trolleys ELEPHANT hoists can also be used for the horizontal movement of load above the floor within the specified load carrying capacities.

Any other use outside these stipulations is deemed to be impermissible. For applications requiring a different intended use please consider the ELEPHANT range of winches and the ELEPHANT RIGGA range of hoists., ELEPHANT LIFTING PRODUCTS cannot be held liable for any damage resulting from incorrect usage. The entire risk is borne by the operator.

The following situations, among others, are regarded as improper use:

- Exceeding the permitted load-carrying capacity.
- Oblique pulling or lifting of the load (Unless specifically allowed by hoist name plate).
- Dropping, throwing and dragging the Hoist.
- Dragging, sliding, swinging and pulling the load.
- Catching of a falling load.
- Carrying people.
- Jog control over long distances.
- Switching to the opposite direction with load in motion.
- Operational reaching of the lifting and lowering limiters.
- Running against the end stopper or structure.
- Loading of the hook at the tip.

Intended use also includes observance of the operational manual and compliance with the inspection and maintenance conditions according to relevant standards, the ASME B30 set of standards is one such example.

Oblique pulling is the deviation of the load chain and the chain hoist from the vertical position.

NOTICE

Under special safety provisions relevant to the situation, it may be possible for certain ELEPHANT Hoists to be used for oblique pulling. Please contact ELEPHANT in writing, if oblique pulling is required.

DANGER

Oblique pulling results in substantially increased forces on the hoist, trolley, and trolley running beam. It is the duty of the responsible person, as described in section 2.3, to ensure that the running beam is able to safely support these increased forces prior to installation of the hoist. Please consult the document titled "ELEPHANT Trolley Inclined Loading Information" for an indication of how the loads on the beam may be calculated. ELEPHANT will not accept any responsibility for injury/damage of any kind caused due to failure to heed this notice.

3.6 Operating conditions

ELEPHANT Hoists are extremely robust and require little maintenance. They are suitable for use in explosion-hazardous areas (see rating on hoist for details), as well as in areas with increased concentrations of soot and dust, high humidity and at ambient temperatures of -20°C (-4°F) up to approx. +70°C (+158°F) if they are not heated above this level due to external influences. The thermal endurance of chains and hooks is 150° C (302°F).

CAUTION

When touching metallic hand controls which are colder than 0°C (32°F), skin could freeze within a few seconds, and at temperatures above 43°C (110°F) , burns may occur. As a protective measure, please wear suitable gloves.

ELEPHANT Hoists are not all suited to every operating environment, and some operating environments may require specific versions of ELEPHANT hoists. If you are operating your hoist in extreme or safety critical environments such as:

- Critical Areas over nuclear plants.
- Over acid baths or other plants with corrosive substances.
- In areas in which organic acids are present.
- In explosive atmospheres (ATEX areas).

Ensure to check with ELEPHANT in writing regarding the suitability of the hoist.

Please, consult your hoists Nameplate for information regarding ATEX rating. And contact ELEPHANT in writing to determine the suitability of your specific version of hoist to your environment.
For stationary outdoor operation, hoists must be protected against weathering, and the maintenance intervals must be shortened.

4 TRANSPORT AND STORAGE

4.1 Safe Transportation

If you wish to dismount or transport your Hoist to another site or for inspection, take note of the following points:

- Carefully dismount trolley from the beam (if fitted).
- Set the entire hoist down carefully; do not allow it to drop. For hoist weight see technical spec sheet for your specific hoist.
- Ensure outcropping features (such as levers) are not damaged by the weight of the hoist.
- Reel in the hoist chain in such a way that loops cannot form and the chain cannot become twisted.
- Secure the chain.

4.1.1 Breaks in operation

- In the case of longer operational breaks, coat the chain, hook, hook latch, and hook pins with a light oil film.
- Always keep the hoist in a no-load condition when not in active use.
- Wipe off all dirt and water.
- Before returning the hoist to service, follow instructions for hoists not in regular service in Section 8.3.

4.1.2 Storage

- Store the hoist in a clean dry and non-corrosive environment.

5 INSTALLATION AND INITIAL OPERATION

The installation of ELEPHANT Hoists shall be performed by a qualified person as described in Section 2.3.

DANGER

Owners and users are advised that regional requirements may apply. It is the duty of the responsible person as described in Section 2.3 to examine specific local or other regulations. In the USA these may include American National Standards Institute (ANSI) and/or American Society of Mechanical Engineers (ASME) and/or OSHA regulations. In the EU these may include the EC Machinery Directive 20006/42/EC, including relevant requirements for CE marking. In China these may include requirements set out by the China Classification Society (CCS) . In South Africa these may include requirements set out by the South African Bureau of Standards (SABS) .

Prior to installing the product, carefully inspect it for possible shipping damage. Products are generally supplied fully lubricated from the factory, however, there are exceptions to this.

The chain on ELEPHANT hoists must always be lubricated following the instructions outlined in Section 9, failure to do so could result in premature wear and failure of the chain.

The second notable exception is the worm drive gearbox (if fitted) . The gearbox is shipped empty and must be filled with oil before use. See lubrication instructions in Section 9.

CAUTION

Always take account of the weight of the hoist when handling it, an indication of the weight of the hoist can be found in the hoist specification sheet, however, the actual weight should be measured.

5.1 Mounting

Always make certain the hoist is properly installed, by:

- Ensuring that the structure/s and component/s to which the hoist is mounted is strong enough to support the entire load placed upon it. This must include, among other factors, the weight of the hoist, the weight of the load being lifted, all rigging equipment, and any effects caused by side (oblique) loading.
- Ensuring that the supporting structure forms a rigid mounting. Vibration damages the chain and can lead to chain fracture. Furthermore, external vibration must not be transmitted to the hoist.
- Provide a suitable safe working platform for the mounting personnel.
- Supply adequate working tools and ensure they cannot be dropped.

DANGER

ELEPHANT trolleys must only be installed by qualified personnel as described in section 2.3. Faulty installation can lead to serious accidents.

DANGER

The trolley girders for ELEPHANT trolleys must be able to safely withstand the expected forces. The trolley girders for ELEPHANT trolley mounted hoists must be level and rigidly supported

DANGER

Suitable end stops must ALWAYS be installed on the girder beam to prevent the hoist from travelling over the end of the beam. Failure to do so could result in dropped load.

DANGER

The nyloc nuts on the crosshead are supplied unfastened. They must be fastened before the hoist is used.

When trolleys are installed on girder beams, there must be sufficient room for the trolley to move freely along the entire length of the track. For example, there should be no screw heads, clamping plates, web plates or other similar obstructions in the way.

Unhindered movement of the hand chain must be ensured along the trolley's path.

5.1.1 Mounting Trolleys into Girders with Open Ends

- Trolleys are supplied from the factory with the side plates pre-adjusted to suit the size of beam they will be mounted on. Hoists must only be mounted on the appropriate beam, based on the SFI number specified on the hoists name tag.
- Push the trolley onto the girder on the open end, with the wheels running on the top face of the bottom flange. For trolleys with a rack drive, the pinion must be lowered as much as possible, and the trolley must be carefully driven onto the rack.

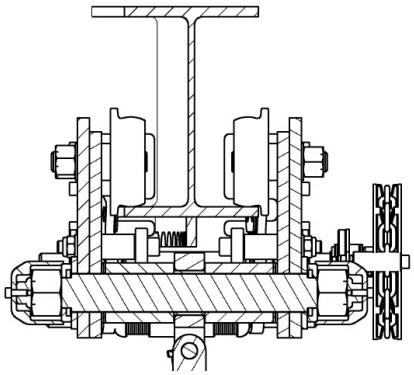

Figure 1

- Make sure there is a small gap on each side of beam between the edge of the bottom girder flange and the wheel flange.
- A weight of 100-200kg should be suspended from the hoist, to allow the trolley to settle correctly on the beam (with all wheels touching the top face of the bottom flange).
- Once the trolley has settled into position the Nyloc nuts on the outsides of the plates must be securely fastened. The torque requirements are shown in Section 11, Bolt Torque Requirements

- To tension the Nyloc nuts the following procedure should be followed:
  1) Remove the outer Nut caps (if fitted).
  2) Lightly tension the Nyloc nut on one side of the crosshead.
  3) Hold the crosshead via the hexagon using an appropriate spanner.
  4) Tighten the Nyloc nut on the opposite side of the crossbeam to the required torque.
  5) Re-attach the outer nut caps.

Nyloc nuts are single use items.

WARNING

5.2 Setting the Anti-Tip rollers

ELEPHANT trolleys are fitted with Anti-Tip rollers, which prevent the trolley from tipping on the beam. These rollers must be positioned, and securely fastened (using the cap screw and nyloc nut), 1-2 mm below bottom face of the bottom beam flange as shown in Figure 2.

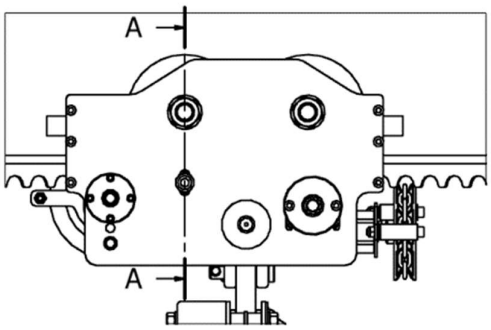

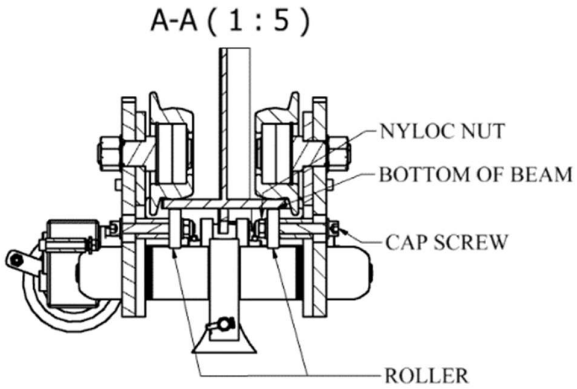

Figure 2

DANGER

Hoists are shipped with the Anti-tip rollers in an unfastened condition. Failure to properly position and tension anti-tip rollers could lead to the hoist tipping on the beam.

5.3 Checking prior to initial Operation

Hoists are tested for proper operation prior to leaving the factory, however, all functionality shall be checked on site following initial installation prior to placing the hoist into operation.

Hoists, including the supporting structure, must be inspected by an appropriately trained and qualified person as described in Section 2.3 before initial operation and before re-commissioning after significant modifications. Hoists and lifting gear which are installed in trolleys must be inspected by a specialist.

The inspection covers:

- The proper mounting, equipment level and operational readiness.
- The completeness, suitability, operation, and effectiveness of the safety devices
- The condition of the equipment and the supporting structure.
- After installation, ensuring the clevis or hook is centered below the beam
- Verify that all components are appropriately lubricated (including the chain and rack drive).
- When first operating the hoist, it is recommended that the hoist be driven slowly in each direction for a few minutes.
- Operate the trolley along the entire length of the beam.
- Using a light load on the hoist check operation of hoist and trolley brakes.
- Check hoist and trolley performance when raising, moving, and lowering test loads. Hoist and trolley must operate smoothly and at rated specifications prior to being placed in service.
- Check all safety devices are functional.

NOTICE

Safety devices are braking devices, overload protection devices, emergency end stop devices.

Hoists mounted into trolleys, mounted onto beams, must comply with the regulations for the prevention of accidents valid for cranes.

The suitability of the system must be checked:

- By a dynamic test with 1.1 times the maximum carrying capacity under normal working conditions (lift load just above floor), the dynamic test must be executed with combined movements.

During these tests, no permanent deformation (distortion) , disturbances of performance or other failures may occur.

If necessary, further tests on the basis of national regulations must be executed. In case of testing loads higher than those mentioned in this manual, please contact ELEPHANT.
.

6 OPERATION

DANGER

As an operator of hoists, you are responsible for your own safety and for that of your colleagues in the working area of the hoist. Operators must be physically competent. Operators must have no health condition which might affect their ability to act, and they must have good hearing, vision and depth perception. The hoist operator must be carefully instructed in his duties and must understand the operation of the hoist, including a study of manufacturer's literature. The operator must thoroughly understand proper methods of hitching loads and should have a good attitude regarding safety. It is the operator's responsibility to refuse to operate the hoist under unsafe conditions.

6.1 General operating requirements

The most important aspects of hoist operation are:

- Follow all safety instructions when operating hoist.
- Allow only people trained in safety and operation of this product to operate this equipment.
- Subject each hoist to a regular inspection and maintenance as outlined in this manual under section 7.
- Be aware of the hoist capacity and weight of load at all times.
- Hoists may only be operated by persons charged with this task by their company.
- Before using the hoist for the first time, familiarize yourself with all permissible operating conditions. For this purpose, read through this operation manual thoroughly and perform the described actions on the hoist.
- Report any malfunction to your safety officer immediately, so that the fault can be remedied without delay.
- Adhere to the regulations of the relevant accident prevention authorities.

To ensure the safety of personnel and property when using ELEPHANT Hoists, it is essential that the following points are observed:

- Lift the load carefully at the beginning.
- Never touch a running chain.
- Never wind the Load Chain around the load or attach the load directly using the Load Chain.
- Never use grab hooks on the load chain.
- Never allow loads to fall into the hoist chain
- If the chain is slack, do not take up the load at maximum speed.
- When operating without a chain box, avoid hazards due to idle chain (falling, catching, impacting).
- Never apply bending loads to chains.

- Do not join or repair hoist chains.
- Do not operate with a chain which is drawn tight, bent or extended.
- Check blocked chains for damage.
- Straighten twisted chains (may indicated a defective bottom block)
- Do not operate with damaged or worn or rusty chains.
- Permissible operating temperature for chain and hook: -20°C (-4°F) to +150°C(+302°F); permissible ambient temperature: -20°C(-4°F) to +70°C (+158°F); permissible heat absorption of the hoist body: max. 90° C (194°F).
- Never allow persons to enter the area below the suspended load.
- Never attempt to remedy a fault with a load suspended from the hoist.
- Only use suitable and approved attaching aids; do not jam the hook at the point of attachment.
- Ensure that the operator is not put at risk within the operating area by attaching aids or the load.
- Follow the relevant instructions for attaching loads.
- Before attaching, accurately position the load vertically below the hoist. The chain must hang vertically before lifting.
- Ensure that the hook safety catch is closed.
- Before lifting loads, ensure that the maximum permissible load is not exceeded.
- Attaching aids must be included in the weight of the load.
- When taking up and setting down, ensure stable positioning of the load, to prevent accidents due to tilting or falling loads.
- Never drive against jammed loads.
- Only use original ELEPHANT chain boxes.
- Ensure that chain enters the chain box smoothly, and that it isn't bunching up.
- Only lift one load at a time; never several loads simultaneously.
- Never lock the control elements of control devices.
- In the case of stiff actuating elements, have the hoist repaired.
- In the case of power failure, secure the load and the surrounding area, until the power is restored.
- Never use or repair bent, open or deformed load hooks. The hoist must be repaired, and the hook must be replaced.
- Never anneal the hook.
- Uncontrolled, external force factors (such as due to hydraulic cylinders, falling loads) are not permitted.
- Repair damaged hook safety latches, and always ensure that the safety latch is properly engaged after attaching the load. .
- Repair stiff hook bearings.
- Do not kink or pinch control hoses.
- Have loose bolted connections tightened by the Repairs department, in accordance with Section 11.
- Do not exceed the permissible capacity of the chain box.
- Repair the hoist if the braking distance is excessive.
- If a load is lifted using several hoists, prevent overloading due to incorrect weight distribution.
- Select a safe operating location.
- Do not apply excessive load to the hand chain
- Never touch metallic components which are colder than 0°C(32°F) or hotter than 43°C(110°F), without suitable protective gloves.
- Do not make modifications to the hoist.
- Only use original ELEPHANT spare parts. ELEPHANT LIFTING PRODUCTS accepts no liability for the use of non-original components and/or modifications by unauthorised persons.
- Do not engage multi-chain hoists if the bottom block is supported.
- All inspections must be completed as per Section 8.
- Ensure stops are securely installed at both ends of the beam prior to using Trolley. This is to prevent the Trolley from running off either of the open ends of the beam track.
- Keep the load as close to the floor as practical.
- Ensure that Trolley wheels' ride on the top surface of the lower flange of the beam. And that this surface is level.
- Special safety precautions must be taken when lifting loads into areas which are out of sight.

- Ensure that the rack drive is properly engaged.

DANGER

For all hoist applications, ensure that the load hook can be lowered all the way to the ground, in order to prevent a load being moved to the lower limit position, without reaching the ground. Failure to do this presents a danger due to overloading.

6.2 Company specific Operating instructions

In the case of particularly difficult lifting equipment applications, for example if several hoists/trolleys are working together, the user must set up the conditions for safe operation. If the local conditions, or the work to be performed make it necessary, the user shall define operating instructions in the language of the operator within, among others, the framework of this manual.

6.3 Lifting and lowering

Load is raised and lowered by pulling down firmly on the appropriate side of the hand chain attached to the chain block hoist. When the chain is released the lifting brake automatically engages.

WARNING

Chain block hoists are designed to require a pulling load of 55 to 110 lb (25 to 50 kg) on the hand chain, if higher values than this are required it is likely that overloading has occurred, or the hoist is otherwise out of working order. If the hand chain becomes difficult to pull the assistance of a competent person, as described in Section 2.3 should be sought.

6.4 Traversing the trolley

The trolley is traversed by pulling down firmly on the appropriate side of the hand chain attached to the crawl wheel.

7 TAKING OUT OF OPERATION

7.1 Shutting Down

If the hoist is to be taken out of operation for a longer period of time it must be protected against corrosion and dirt.

- Coat the chain and hook with a light oil film.
- Move the load hook out of the lifting area, in order to avoid hazardous situations.
- Make sure to follow the storage and transport instructions specified in Section 4.

7.2 Dismantling

DANGER

Disassembling a Trolley Hoist from the beam by separating the side Plate Assembly is extremely dangerous and this operation should be carried out by competent personnel. As outlined in Section 2.3.

WARNING

Exploded views are available from ELEPHANT on request and must be obtained before attempting to dismantle the hoist. Incorrectly assembling, or disassembling, a hoist could lead to hoist failure.

DANGER

ELEPHANT Hoists must only be dismantled by qualified personnel.

- Check fault list for problem solving.
- Do not disassemble the hoist any further than necessary to replace or repair damaged parts unless major service is due.
- Whenever grasping a component in a vice, always use aluminum, or copper covered, vice jaws to protect the surface of the component and help prevent damage. This is particularly true of threaded members and housings.
- Do not disassemble this hoist unless you have a complete set of new gaskets, O-rings and seals on hand for replacement. These are available in the Overhaul Seal and Gasket Kit and parts list.
- Do not attempt to recondition by washing out sealed bearings. We recommend that all bearing, vanes & O-rings be replaced when the hoist is reassembled

7.2.1 Further dismantling instructions

Further dismantling instructions for specific components may be available from ELEPHANT on request.

7.3 Disposal

ELEPHANT Hoists contain a range of materials which, on expiry of the service life, must be disposed of or recycled where appropriate, in accordance with statutory regulations.

Please note the following list of materials used:

Hoist

- Ferrous materials
  - Steel
  - Nodular cast iron
- Non-ferrous metals
  - Bronze
- Plastics
  - Polyethylene
  - Polyurethane
  - Polyamide
  - Natural rubber
  - Epoxy resin
  - Polyacetal
  - Thermoset moulding compound
  - (Asbestos-free brake lining)

8 MAINTENANCE AND INSPECTION

Careful inspection on a regular basis will reveal potentially dangerous conditions while still in the early stages, allowing corrective actions to be taken before the condition becomes dangerous.

Any malfunction, damage or deficiency revealed through inspection must be reported to an appointed person. A decision must be made as to whether a deficiency constitutes a safety hazard before resuming operation of the hoist. Maintenance and inspection work may only be performed once the responsible person in charge is convinced that the trolley and the hoist is cut off from the energy supply and that measures have been taken to prevent the unauthorized re-supply of energy.

If there is a danger that parts may fall down, the corresponding area has to be barricaded and protected by guards. Other risks from neighboring installations also have to be safeguarded against. After completion of the work, operation may only recommence following release by the responsible person. Before release, the operator must be convinced that all work has been completed, that the entire system is in a safe condition again, and that all personnel involved have cleared the installation as appropriate.

The results of the inspection must be recorded in the inspection log.

ELEPHANT recommends two types of inspection:

(a) The frequent inspection performed by the operator as pre-work inspection.
(b) The periodic inspections performed by personnel trained in the operation and repair of the Hoist.

8.1 Frequent Inspection

On hoists in continuous service, frequent inspection should be made at the beginning of each shift. In addition, visual inspections should be conducted during regular service for any damage or evidence of malfunction. Inspection frequency shall be at least as frequent as below.

USEAGE	NORMAL	HEAVY	SEVERE
INSPECTION FREQUENCY	MONTHLY	WEEKLY TO MONTHLY	DAILY TO WEEKLY

8.1.1 Operation.

Check for visual signs or abnormal noises (grinding etc.) which could indicate a potential problem. Make sure all controls function properly. Additionally, ensure that the chain and drive do not “run on” and that the brake activates when the control is released. Check chain feed through the chain guides, sprockets, and bottom block. If chain jams, wedges, jumps, is excessively noisy or “clicks”, clean and lubricate the chain. If problem persists, replace the chain sprockets or chain guide. Do not operate the hoist until all problems have been corrected.

8.1.2 Hooks.

Check for wear or damage, increased throat width, bent shank or twisting of the hook. Replace hooks which exceed the allowable wear limits or exceed a 10 degrees twist. If the hook latch snaps past the tip of the hook, the hook is damaged and must be replaced. Check hook support swivels for excessive clearance or damage. Ensure they swivel easily and smoothly.

With reference to Figure 3, the allowable wear limits are:

- No more than 10% increase of size ***a***, compared to original measurement;

- No more than 5% decrease in size ***h***, compared to original measurement;

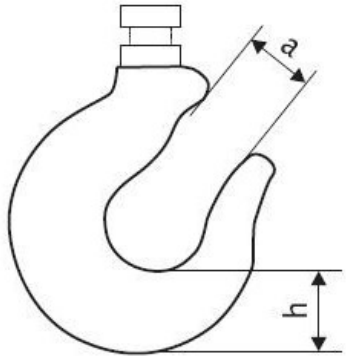

Figure 3: Hook wear sizes

Hook size [ton]	Stock Number*	Hook opening dimension [mm]+		Height dimension [mm]	
		Nom.	Max.	Nom.	Min.
0,5 - 2	JS01365	27,0	29,7	27,0	25,7
3	HS04442-1	33,0	36,3	37,9	36,0
5-6	HS04440	41,5	45,7	47,0	44,7
10	HS04443	58,0	63,8	60,0	57,0
*If the stock number of your hook deviates from the stock number in this table, contact ATS 2000 for the appropriate sizes.					
+If safety catch fitted, subtract the thickness of the safety catch from the maximum hook opening dimension "a"					

Table 1

The sizes in Table 1 are based on nominal dimensions. Due to manufacturing tolerances it is possible for the hook dimensions to vary by up to ± 6%. The allowable wear limits must therefore be based on the original measured size of the specific hook when new.

8.1.3 Hook Safety Latch.

Make sure the hook safety latch is present and operating properly. Replace if necessary.

WARNING

Do not use hoist if hook safety latch is missing or damaged.

8.1.4 Load Chain.

Examine each of the links for bending, cracks in weld areas or shoulders, traverse nicks and gouges, corrosion pits, and chain wear, including bearing surfaces between chain links (see Figure 4). Replace a chain that fails any of the inspections. Check chain lubrication and lubricate if necessary. Refer to “Load Chain” in “Lubrication” Section 9.2.

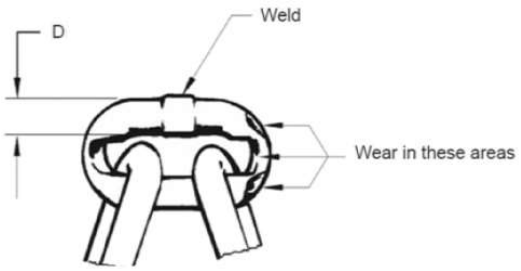

Figure 4: Chain Link

DANGER

The full extent of load chain wear cannot be determined by visual inspection. At any indication of load chain wear inspect chain and chain wheel in accordance with instructions in "Periodic Inspection" Section 8.2.10.

DANGER

The fatigue strength of chains is significantly impaired due to extreme corrosion (pitting corrosion) . There is a danger of fracture. Hydrogen-induced embrittlement with resultant stress cracks due to highly corrosive media (e.g. seawater) may affect high strength steels (e.g. chains). There is a danger of fracture. Particular care must be taken to properly inspect rusted chain for cracking if it has not yet been replaced. ELEPHANT recommends that all rusted chain is replaced immediately.

8.1.5 Testing the Brake (Hoist and Trolley motor)

Test the brake function daily.
When the hand chain is released, the hoist/trolley must not keep running for an unusually long time.

DANGER

If the trolley/hoist keeps running for an unusually long time after braking, the brake must be repaired.

8.1.6 Load Chain Reeving.

Ensure welds on upright links face away from the center of the driven load sheave. Reinstall chain if necessary. Make sure chain is not twisted or kinked. Adjust as required.

8.1.7 Chain Bag / Container.

Check for damage or excessive wear and that the chain container is securely attached to the hoist. Secure or replace if necessary. Ensure correct positioning of the chain bag.

DANGER

Although the use of a chain bag gives a large increase to operational safety in most applications, it still represents a notable safety risk (even under no load) which must not be overlooked. Particular attention must be given to ensuring the chain feeds into the chain bag properly and that "piling" is not occurring. Running the chain without lubrication, or with rust on the chains, increases the chances of "piling" inside the chain bag. Which can lead to failure of the bag and dropping of the load chain. This must therefore be avoided.

8.1.8 Trolley Travel Buffers.

The trolley travel buffers must be checked, for presence and condition. They must not be overly deformed or otherwise damaged.

DANGER

Travel buffers must not be used to stop the hoist under normal use. The travel buffers are safety devices for emergency use only.

8.1.9 Hand Chain

During operation of the hoist, check that the lifting and travelling hand chains run smoothly and are properly supported in the hand chain wheel and that the hand chain wheel guards are fitted. Ensure that the hoist responds to forces applied to the hand chains as expected.

8.1.10 Daily Inspection for Machines Operated in Corrosive Environments

If the operating environment is corrosive, a more in-depth daily inspection should be undertaken; All exposed bearings should be checked to see if they rotate freely. Unshielded bearings and exposed, untreated steel should be well greased.

8.1.11 Trolley Wheel flanges

Over time the flanges on the trolley wheels of ELEPHANT hoists will wear down. Visually inspect that that the trolley wheels are not excessively worn (indicated by a larger than normal gap between the trolley wheel flange and

WARNING

Maintenance work on ELEPHANT Hoists/Trolleys must only be performed by trained and qualified personnel. In the case of maintenance work exceeding normal service and maintenance, please contact ELEPHANT for specific instructions.

8.2 Periodic Inspection

The frequency of periodic inspection depends on the severity of usage:

USEAGE	NORMAL	HEAVY	SEVERE
INSPECTION FREQUENCY	YEARLY	BIANNUALLY	QUARTERLY

Disassembly may be required for HEAVY or SEVERE usage. Keep accumulative written records of periodic inspections to provide a basis for continuing evaluation. Inspect all the items in “Frequent Inspection”, and also inspect the following:

8.2.1 Fasteners

Check cap screws and nuts. Replace if missing or tighten if loose – in accordance with Section 11.

8.2.2 All Components

Inspect for wear, damage, distortion, deformation and cleanliness. If external evidence indicates the need, disassemble. Check gears, shafts, bearings, load sheaves, chain guides, springs and covers. Replace worn or damaged parts. Clean, lubricate and reassemble.

8.2.3 Hooks

Inspect hooks carefully for cracks using magnetic particle or other suitable non-destructive testing methods. Inspect hook swivels for smooth function. Tighten swivel bolts if necessary.

8.2.4 Load Sheaves

Check for damage or excessive wear. Replace if necessary. Observe the action of the load chain feeding through the hoist. Do not operate a hoist unless the load chain feeds through the hoist and bottom block smoothly and without audible clicking or other evidence of jamming, wedging or malfunctioning.

8.2.5 Brake

Raise a load equal to the rated capacity of the hoist about 200mm off the floor. Verify hoist holds the load without slipping. If slipping occurs, disassemble the brake to remove brake disc/s. Check and clean the brake parts each time the hoist is dismantled. Check and clean the brake parts each time the hoist is dismantled. Check for evidence of worn glazed, or oil contaminated friction disks; worn pawls; cams or ratchet; corroded, stretched, or broken pawl springs in brake mechanism.

8.2.6 Supporting Structure

Check for distortion, wear and continued ability to support the load.

8.2.7 Trolley

Check that the trolley wheels run properly on the beam and that the distance between wheel flanges exceeds the beam flange size by 2 to 3 mm. Check that wheels and rail are not excessively worn and inspect the side plates for opening up due to bending. Do not operate the hoist until any problems have been identified and corrected.

8.2.8 Nameplate/Warning Stickers/Max Load Markings

Check for presence and legibility. Replace if necessary.

8.2.9 Trolley Wheel Flanges

Trolley wheel flanges must be inspected for excessive wear as shown in Figure 5. The minimum allowable thickness of the wheel flange, W, is shown in the table below for each wheel size. It may be necessary to reduce the width of the trolley side plates, by removing spacers from the trolley crosshead, to account for wear before the wheel reaches the minimum allowable size.

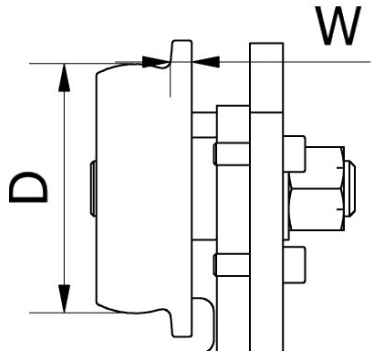

Figure 5

Wheel Diameter [mm]	Limit size of flange thickness [mm]
65	2,7
90	5
110	5,5
145	6
200	10

Table 2

8.2.10 Load chain anchors

Ends of the load chain are securely attached to the hook swivel or dead-end pin, that the pins are not excessively worn/corroded, and that there is no evidence of cracking or other damage.

8.2.11 Load Chain

Ensure both ends of the load chain are securely attached to the hook swivel or dead end pin. Secure if loose, repair if damaged, replace if missing. Always use the load chain recommended by ELEPHANT for the desired application.

Measure the load chain for wear and stretching as shown in Figure 6 and compare to the allowable limits in Table 3.

Take care to take the measurements on that part of the chain which comes into contact with the load sheave most often. If the measurements deviate from values shown in Table 3, replace the chain.

The chain must be checked for a reduction of the average wire diameter(d_m) *at any point* on the chain link of more than

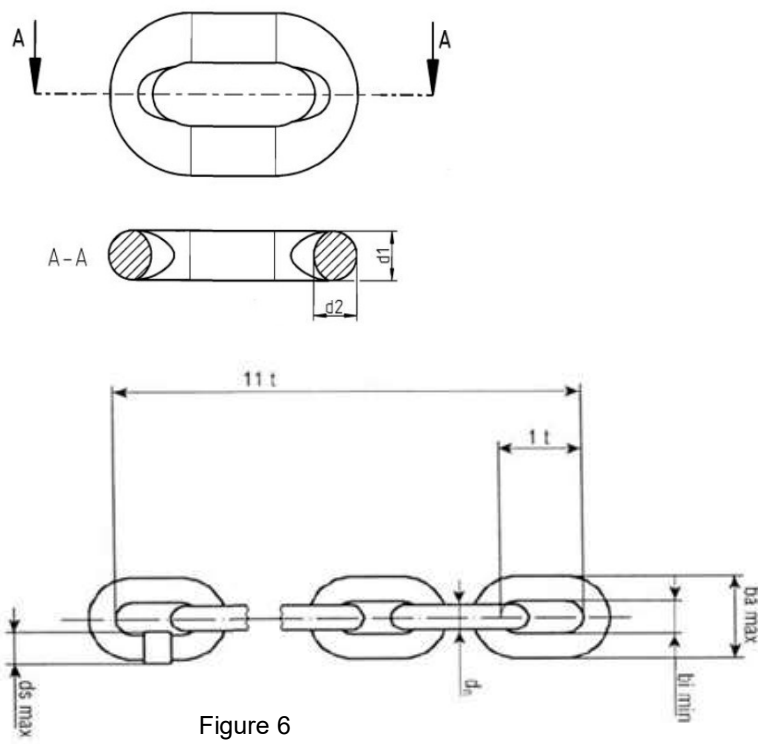

Figure 6

Chain d x t	7x21 [mm]	9x27 [mm]
dn	≤7.1	≤9.1
1t	21	27
1t max	≤ 22,05	≤ 28,35
11t	231	297
11t D	≤ 237,93	≤ 305,91
11t M	≤ 235,62	≤ 302,94
bi min	8.4	10.8
ba max	23.6	30.4
ds max	7.5	9.6
d_m	≥ 6,3	≥ 8,1

Table 3: Allowable Chain Wear Sizes

10% of the nominal diameter. The average wire diameter $d_m = \frac{d_1+d_2}{2}$. Where d_1 and d_2 are two individual measurements (d_1 *and* d_2) made at an angle of 90° to each other as shown below.

8.3 Hoists Not in Regular Use

1. A hoist which has been idle for period of one month or more, but less than one year, should be given an inspection conforming with the requirements for “Frequent Inspection” prior to being placed into service.

2. A hoist which has been idle for a period of more than one year should be given an inspection conforming with the requirements of “Periodic Inspection” prior to being placed into service.

3. Standby hoists should be inspected at least biannually in accordance with the requirement of “Frequent Inspection”. In abnormal operating conditions hoists should be inspected at shorter intervals

8.4 Cleaning and Care

If your ELEPHANT hoist/trolley must work in dirty surroundings, remove coarse dirt from the hoist/trolley. Lubricate the hoist and trolley as explained in Section 9

8.5 Spare Parts

If, during repair work, the replacement of components is necessary, only original ELEPHANT spare parts may be installed. If other components are used danger may occur. Such action can only be allowed after having received ELEPHANT agreement.

8.6 Records and Reports

An inspection record shall be maintained for each hoist, listing all points requiring periodic inspection. A written report should be made monthly on the condition of the critical parts of each hoist. These reports should be dated, signed by each person who performed the inspection, and kept on file where they are readily available to authorized personnel.

9 LUBRICATION

To ensure continued satisfactory operation of the hoist, all points requiring lubrication must be serviced with the correct lubricant at the proper time interval. Correct lubrication is one of the most important factors in maintaining efficient operation.

The lubrication intervals recommended in this manual are based on intermittent operation of the hoist eight hours each day, five days per week. If the hoist is operated almost continuously or more than the eight hours each day, more frequent lubrication will be required. Also, the lubricant types and change intervals are based on operation in an environment relatively free of dust, moisture, and corrosive fumes. Use only those lubricants recommended. Failure to observe this precaution may result in damage to the hoist and/or its associated components.

CAUTION

If grease becomes contaminated with dirt or other abrasive material, clean off old grease and apply new grease.

DANGER

Make sure excess lubricant does not contaminate trolley wheels, riding surface of the beam, and track clamp friction material. Failure to keep beam track and wheel contact surface clean affects the safe operation of the Trolley/Hoist.

9.1 Gearing

Apply a coating of grease to all gearing before assembly. Neglect of proper lubrication will lead to failure. The recommended greases are as follows: DIMOL GR-2-EP, CASTROL SHEEROL EP2 and SHELL ALVANIA EP2. If these specific greases are not available use equivalent grease.

9.2 Load Chain (Including Load Chain Anchors)

The load chain of ELEPHANT hoists must be lubricated in the unloaded condition. Start by cleaning heavily contaminated chains, then coat the chain in lubricant.

Under normal operation the chain should be coated liberally with a 40W or 150 centistoke good quality oil. If the hoist is being used in extreme environments, such as offshore, OPTIMOL VISCOGEN KL300 should be used - it is available as an aerosol, and in a drum. It is water resistant and will give maximum chain life.

Lubrication should only be omitted if there are abrasive substances in the working environment which could be deposited in the lubricant and so create an abrasive effect which would increase chain wear. A dry lubricant must be used in this instance. The frequency should match that of the frequent inspections specified in Section **8.1**.

9.3 All external components (excluding wheels, rack drive, and brake friction material)

The external surface of all components including hook, bottom block, top block, gearbox, motor, side plates, top lug, and top lug pin, should be lightly coated in mineral oil. The frequency of lubrication should match that of the periodic inspections specified in Section 8.2.

9.4 Worm drive gearbox

The worm drive gearbox must be filled with 10ml of Mobile Delvac Synthetic Gear Oil 75W-90.. Oil will begin to spill out of the port when the gearbox is completely filled. Remove the oil cap and use a tube and syringe (supplied with the hoist) to fill the port. Oil should be replaced at the same frequency as the periodic inspections specified in Section 8.2. Used oil can be drained through the fill port using the supplied tube and syringe
.

10 OVERLOAD PROTECTION

ELEPHANT air hoists have overload protection fitted as a standard feature. Overload protection automatically disables the “UP” lifting operation if the load reaches or is greater than a maximum set load. The maximum load setting is between 110% and 150% of the hoists rated load capacity.

DANGER

Tampering with the load limiter in order to lift loads above the rated load of the hoist is a violation of the intended use as specified in Section 3.5. And could lead to overload condition and dropped load.

DANGER

ELEPHANT hoists have the load limiter set, and validated with a load test, during factory acceptance testing. If the load limiter is adjusted after this factory testing a load test and overload test must be conducted and recorded, to verify correct functioning of the load limiter. Failure to do so could lead to an overload condition and dropped load.

10.1 Mechanical Load limiter

Most ELEPHANT hoists are fitted with mechanical load limiters on the first stage of the gearbox. This load limiter requires special tooling to reset. It is set at 150% WLL at the factory and should not require adjustment throughout the hoist’s life. If the load limiter is activating it is likely the hoist is in an overload condition.

If you feel the load limiter requires adjustment for any reason, contact ELEPHANT for specific instructions and to attain tooling.

11 BOLT TORQUE REQUIREMENTS

Torque requirements for cap screws and bolts on ELEPHANT hoists are outlined below.

DANGER

The below values DO NOT apply to crosshead or axle nuts – nor to stainless steel fasteners. Only to the relevant 8.8/9.8 and 10.9/12.9 bolts specified. Overtightening bolts, or nuts could lead to failure.

Metric Coarse Thread Torque [Nm]				
Size	Class 8.8/9.8		Class 10.9/12.9	
	Dry	Lubricated	Dry	Lubricated
M6x1	12 - 14	8 - 9	15 - 16	11 - 12
M8x1,25	28 - 31	22 - 24	35 - 41	27 - 30
M10x1,5	56 - 64	42 - 47	72 - 81	53 - 61
M12x1,75	96 - 110	73 - 83	123 - 140	92 - 104
M14x2	156 - 176	117 - 133	199 - 225	149 - 169
M16x2	224 - 254	168 - 190	308 - 348	230 - 262
M18x2,5	309 - 350	232 - 262	426 - 483	319 - 362
M20x2,5	435 - 494	327 - 370	601 - 681	450 - 510
M22x2,5	595 - 674	446 - 506	820 - 930	616 - 697
M24x3	754 - 854	565 - 641	1040 - 1178	780 - 884
M30x3,5	1495 - 1695	1121 - 1272	2062 - 2337	1547 - 1753

Metric Coarse Thread Torque [Foot-pounds]				
Size	Class 8.8/9.8		Class 10.9/12.9	
	Dry	Lubricated	Dry	Lubricated
M6x1	9 - 10	6 - 7	11 - 12	8 - 9
M8x1,25	21 - 23	16 - 18	26 - 30	20 - 22
M10x1,5	41 - 47	31 - 35	53 - 60	39 - 45
M12x1,75	71 - 81	54 - 61	91 - 103	68 - 77
M14x2	115 - 130	86 - 98	147 - 166	110 - 125
M16x2	165 - 187	124 - 140	227 - 257	170 - 193
M18x2,5	228 - 258	171 - 193	314 - 356	235 - 267
M20x2,5	321 - 364	241 - 273	443 - 502	332 - 376
M22x2,5	439 - 497	329 - 373	605 - 686	454 - 514
M24x3	556 - 630	417 - 473	767 - 869	575 - 652
M30x3,5	1103 - 1250	827 - 938	1521 - 1724	1141 - 1293

1. Definitions
   Dry = Cadmium Plate, zinc plate, and oiled fasteners.
   Lubricated = Molysulfide paste, carnaba wax, molysulfide grease, and copper-based anti-seize coated fasteners.
2. If mixing fasteners use lowest torque value.
3. Torque values 75 to 85% of fastener proof load (for 8.8 and 10.9 fasteners) – **not applicable to stainless steel fasteners.**

DANGER

All fasteners should incorporate at least one secondary means of retention. Such as Nyloc nuts, split pins, or a locking adhesive. Nyloc nuts are single use items. Contact ELEPHANT for further information if required

12 TROUBLESHOOTING TABLE

DANGER

The below is a brief list of trouble shooting points. It is not exhaustive, nor does it intend to replace the judgment of competent and experienced personnel. Please contact ELEPHANT L T N P T LL for specific instructions should you experience a problem outside the scope of the below table.

SYMPTOM	CAUSE	REMEDY
Lifting not possible	Load limiter triggered (overload condition)	Reduce load.
	Load limiter triggered (no overload condition)	Engage down function, and then attempt to lift again.
	Hand chain jammed	Rectify hand chain.
Lowering not possible	Hand chain jammed	Rectify hand chain.
Load drifts down	Faulty brake	Remove hoist from service and rectify brake problem.
Noise from load chain	Chain entering hoist skew	Ensure chain enters hoist straight (with no twists), and that hoist is properly level. Ensure chain is in good condition.
	Incorrect chain	Ensure correct load chain is used.
	Chain not lubricated	Lubricate chain appropriately.
	Chain worn or damaged	Replace chain.
Trolley cannot be moved	Rack drive not properly engaged	Properly Engage rack drive.
	Hand chain jammed	Rectify hand chain.
Trolley can only be moved slowly or not at all	Hand Chain jammed or obstructed	Rectify hand chain.
	Track clamp engaged	Release track clamp.
	Trolley side plate spacing too narrow, causing trolley to interfere with beam	Rectify trolley spacing.
Trolley is repeatedly blocked at the same place	Tracks are uneven or rail joint displaced	Rectify track faults
Pawl makes the proper clicking sound but fails to lift the load	Worn friction plate	Replace the friction plates.
Pawl produces no sound and fails to lift the load	Pawl has been improperly assembled or is not moving smoothly	Reassemble the parts correctly.
Chain is tight, even with no load	Worn gears or bearings	Disassemble the chain block. Inspect gears and bearings. Replace worn components.
Improper lowering, or chain is tight when lowering	Brake is too tight or rusted	Free the brake forcibly by jerking the hand chain. Clean or replace rusted parts.
Load drops as lowering starts	Braking surface is contaminated	Replace brake discs if oily. Clean if dirty. Do not oil or grease braking surfaces
Load slipping	As above	As above

13 TECHNICAL SPECIFICATIONS AND MACHINE DIMENSIONS

A technical drawing of your specific hoist containing machine dimensions and performance specifications should be attached as an appendix to this manual. If this drawing has not been attached contact ELEPHANT LIFTING PRODUCTS quoting your hoists model and serial number to attain it.

14 EXPLODED VIEWS AND SPARE PARTS

A set of exploded views for your specific hoist should be attached as an appendix to this manual. Certain spare parts can be ordered from ELEPHANT LIFTING PRODUCTS, LLC by quoting the relevant stock number. If the exploded view pack has not been attached contact ELEPHANT LIFTING PRODUCTS quoting your hoists model and serial number to attain it.

15 FURTHER MAINTENANCE AND REPAIR INSTRUCTIONS

Further maintenance and repair instructions, outside of the scope of this manual, may be available from ELEPHANT LIFTING PRODUCTS, LLC. Contact ELEPHANT LIFTING PRODUCTS, LLC quoting your hoists model and serial number to attain them. ELEPHANT LIFTING PRODUCTS, LLC will assess such requests on a case by case basis.

16 HOISTS AND TROLLEYS INTENDED FOR USE IN POTENTIALLY EXPLOSIVE ATMOSPHERES

Form ATS-ATEX1
Edition 5
August 2019

The EC Declaration of Conformity in this manual state that these Hoist and Trolley models are in compliance with European Community Directive 94/9/EC for equipment intended for use in potentially explosive atmospheres, commonly referred to as the ATEX Directive. Standard Hoist and Trolley models conform to and are marked for use as defined by ATEX designation:

16.1 Ex II 2 GD IIA T4 (X) / Ex II 3 GD IIB T4 (X)

Standard version ELEPHANT hoists (as fitted standard with Galvanised chain) are category 2 devices Guideline 94/9/EC, for use in zone 1 and 2 for gases of explosion group IIA. These devices are also suitable for use in zone 2, in the presence of gases of explosion group IIB, provided that the substances hydrogen sulphide and ethylene oxide can be excluded and additionally in zones 21 and 22 for dusts with glow temperatures above 210° C or ignition temperatures above 202° C, provided that no light metal or other impact sensitive dusts are present.

Hoist and Trolley models with the additional “special spark proof design” package of spark protection conform to and are marked for use as defined by ATEX designation:

16.2 Ex II 2 GD IIC T4 (X) / Ex II 2 GD IIB T4 (X)

ELEPHANT hoists of the version “**with special spark proof design protection**” (SP) satisfy additional explosion protection requirements. With the exception of carbon disulphide (temperature class T6), they can be used in presence of all gases in zones 1 and 2 and dusts with glow temperatures above 210° or ignition temperatures above 202° in zones 21 and 22, and can be marked. For further operating conditions, see instructions for safe operation.

ELEPHANT trolley running gear “with Special spark proof design protection”
For use in zone 1 in the presence of gases in explosion group IIC, bronzed / Nickeled running wheels or running wheels made of bronze or Stainless steel are also used. The highest possible designation for this version (SPR) is
EX II2 GD IIC T4 (X) (the same as for ELEPHANT hoists “with Special spark proof design protection”).

These ATEX designations define the applications, the type and duration of the potentially explosive atmospheres, the type of protection, and the maximum surface temperature.

Hoists intended to be used in underground parts of mines as well as those parts of surface installations of such mines endangered by firedamp and/or combustible dust are marked for use as defined by ATEX designation:

16.3 **Ex I M2 IIB T4 (X)**

The **X** indicates that additional special conditions are required for safe application, operation and/or maintenance of these tools when used in potentially explosive atmospheres.

These ATEX designations define the applications, type and duration of the potentially explosive atmospheres, type of protection, and the maximum surface temperature.

Ex This symbol indicates certification for use in an explosive atmosphere and is followed by other symbols indicating the details of that certified use.

I- Indicates Equipment Group I - Mine use.

II- Indicates Equipment Group II - Non-Mine Use.

2- Indicates Equipment Category 2 - Equipment Category 2 is intended for use in areas in which explosive atmospheres caused by gases, vapours, mists or air/dust mixtures are only occasionally likely to occur. Protection level is very high during normal use and in the event of frequently occurring disturbances or equipment faults.

3- Indicates Equipment Category 3 - Equipment Category 3 is intended for use in areas in which explosive atmospheres caused by gases, vapours, mists or air/dust mixtures are unlikely to occur. Protection level is normal during intended use and in the event of infrequently occurring disturbances or equipment faults.

M2- These products are intended to be de-energized in the event of an explosive atmosphere. Protection methods must be incorporated to provide a high level of safety.

G - Indicates evaluation for explosive atmospheres caused by gases, vapours or mists.

D - Indicates evaluation for explosive atmospheres caused by dust.

T - Indicates the maximum surface temperature Class.

X - Indicates that there are special conditions for safe application, installation, operation and maintenance which must be followed for the certification to apply.

This designation refers to explosion protection details in the operation manual.

EX II 2 GD IIA T4 (X) /II 3 GD IIB T4 (X) or **EX II 3 GD IIA T4 (X):**

This designation does not permit use in the presence of the extremely flammable substance hydrogen sulphide and ethylene oxide or in the presence of light metal or other impact-sensitive dusts, or in the presence of dusts with

glow temperatures below 210° C or ignition temperatures below 202° C. The permissible ambient temperature range (Ta) extends from – 20° C to + 70°C.

At carrying capacities above 20 tons, continuous operation of the hoists is not permitted if the ambient temperature exceeds 50° C. In these cases, cooling times must be observed in order not to exceed the permissible surface temperatures.

EX II 2 IIC T4 (X) or **EX II 2 GB IIB T4 (X):**

The permissible ambient temperature range (Ta) extends form – 20° C to + 70° c. At carrying capacities above 20 tons, continuous operation of the hoists is not permitted if the ambient temperature exceeds 50° C. In these cases, cooling times must be observed in order not to exceed the permissible surface temperatures.

17 SERVICE NOTES

Elephant Lifting Products, LLC
38381 N. Robert Wilson Rd., Suite A • Gonzales, Louisiana 70737 • USA

Toll Free: 1.888.844.6113 • Phone: 1.225.644.6113 • Fax: 1.225.644.6695

www.elephantlifting.com • sales@elephantlifting.com