Please read this manual without fail before you install your chain hoist.

ELEPHANT ELECTRIC CHAIN HOIST

# OPERATION MANUAL

for Models DA and DB

ELEPHANT CHAIN BLOCK CO., LTD.

Osaka, Japan

(No.2)

CONTENTS

# EXPLODED VIEW AND PARTS NAMES

## ASSEMBLY PARTS

| | | | |
|---|---|---|---|
| ① | Top Hook Ass'y | ⑫ | Brake Disc Ass'y |
| ② | Gear Side Plate Ass'y | ⑬ | Power Cord Holder Ass'y |
| ③ | Motor Side Plate Ass'y | ⑭ | Cord Holder Ass'y |
| ④ | Motor Case Ass'y | ⑮ | Bottom Hook Ass'y |
| ⑤ | Ist Gear Ass'y | ⑯ | Limit Switch Ass'y |
| ⑥ | Electric Equipment Ass'y | ⑰ | Limit Switch Ass'y |
| ⑦ | Load Sheave Ass'y | ⑱ | Holding Metal Ass'y |
| ⑧ | Sheave Cover Ass'y | ⑲ | Pushbutton Ass'y |
| ⑨ | Ratchet Disc Ass'y | ⑳ | Chain Stopper Ass'y |
| ⑩ | Pawl Ass'y | ㉑ | Chain Bag Ass'y |
| ⑪ | Rotor Ass'y | | |

When ordering spare parts, be sure to say Model Code, Serial No., Part No. (or Ass'y No.), Part Name, and Quantity. Assembly Parts are sold only in complete assembly set.

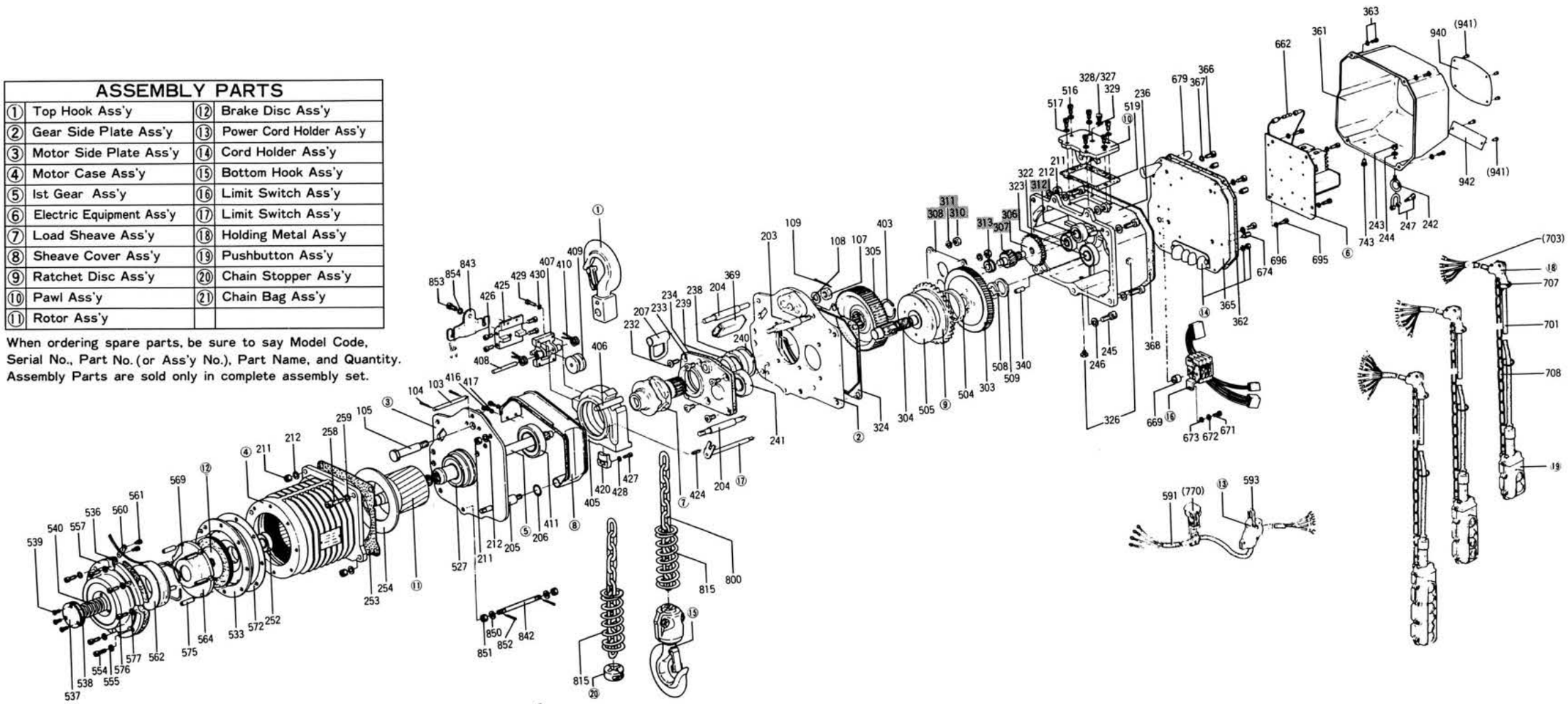

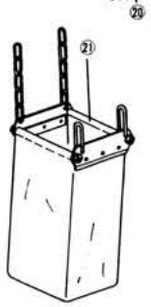

| | |
|---|---|
| 103 | Top hook stopper pin |
| 104 | Cotter pin |
| 105 | Top hook pin |
| 107 | Hex. nut |
| 108 | Spring washer |
| 109 | Cotter pin |
| | |
| 203 | Stay bolt (A) |
| 204 | Stay bolt (B) |
| 205 | Stay bolt (C) |
| 206 | O ring |
| 207 | Hanger, holding metal |
| 211 | Hex. nut |
| 212 | Spring washer |
| 232 | Sunk bolt w/hex. hole & seal |
| 233 | Flange B |

| | |
|---|---|
| 234 | Packing, Flange B |
| 236 | Gear case |
| 238 | Ball bearing 2 |
| 239 | Oil seal A |
| 240 | Snap ring |
| 241 | Ball bearing 3 |
| 242 | Eye bolt |
| 243 | Hex. nut |
| 244 | Spring washer |
| 245 | Bolt w/hex. hole |
| 246 | Spring washer |
| 247 | Shackle |
| 252 | Ball bearing 7 |
| 253 | Packing, Motor case |
| 254 | Plate for locating |
| 258 | Bolt w/hex. hole |

| | |
|---|---|
| 259 | Spring washer |
| | |
| 303 | DA-2nd gear DB-4th gear |
| 304 | DA-3rd gear DB-5th gear |
| 305 | DA-4th gear DB-6th gear |
| 322 | Ball bearing 4 |
| 323 | Ball bearing 5 |
| 324 | Packing, gear case |
| 326 | Oil plug |
| 327 | Oil plug |
| 328 | Air-hole bolt |
| 329 | Packing, air hole bolt |
| 340 | Spring pin |
| 361 | Electric Component Case |
| 362 | Packing, electric component case |
| 363 | Hex. bolt w/cross hole & washer |

| | |
|---|---|
| 365 | Electric component board |
| 366 | Bolt w/hex. hole |
| 367 | Spring washer |
| 368 | Adiabatic packing |
| 369 | Protection rubber of lead wire |
| | |
| 403 | Snap ring |
| 405 | Chain guide |
| 406 | Anti-rotation pin |
| 407 | Roller board |
| 408 | Roller pin |
| 409 | Roller |
| 410 | Intermediate stick spring |
| 411 | Ball bearing |
| 416 | Bolt w/hex. hole |
| 417 | spring washer |

| | |
|---|---|
| 420 | Stripper |
| 424 | Corrugated spring pin |
| 425 | Holding board for spring |
| 426 | Bolt w/hex. hole |
| 427 | Bolt w/hex. hole |
| 428 | Spring washer |
| 429 | Bolt w/hex. hole |
| 430 | Spring washer |
| | |
| 504 | Bush for ratchet disc |
| 505 | Disc hub |
| 508 | Split ring |
| 509 | Stopper ring |
| 516 | Bolt w/hex. hole & seal |
| 517 | Spring washer |
| 519 | Packing, pawl board |

| | |
|---|---|
| 527 | Ball bearing 6 |
| 533 | Bearing support |
| 536 | Packing, brake stator |
| 537 | Spring cover |
| 538 | Packing, spring cover |
| 539 | Bolt w/hex. hole |
| 540 | Brake spring |
| 554 | Bolt w/hex. hole |
| 555 | Spring washer |
| 557 | Brake stator |
| 560 | Cord pressing metal |
| 561 | Bolt w/hex. hole |
| 562 | Brake coil |
| 564 | Moving core |
| 569 | Snap ring |
| 572 | Packing, bearing support |

| | |
|---|---|
| 575 | Corrugated spring pin |
| 576 | Bolt w/hex. hole |
| 577 | Spring washer |
| 591 | Cabtyre cord |
| 593 | Shackle |
| | |
| 662 | Fuse |
| 669 | Joint pipe |
| 671 | Bolt w/hex. hole |
| 672 | Spring washer |
| 673 | Plain washer |
| 674 | Hex. stay pin |
| 679 | Glass tube |
| 695 | Bolt w/hex. hole |
| 696 | Spring washer |
| 701 | Pushbutton cord |

| | |
|---|---|
| (703) | Bush |
| 707 | Shackle |
| 708 | Suspension chain |
| 743 | Plug |
| (770) | Cable hanger |
| | |
| 800 | Load chain |
| 815 | Stopper spring |
| 842 | Chain bag support pin |
| 843 | Chain bag support metal |
| 850 | Plain washer |
| 851 | Hex. nut |
| 852 | Cotter pin |
| 853 | Bolt w/hex. hole |
| 854 | Spring washer |
| | |

| | |
|---|---|
| 940 | Nameplate |
| (941) | Rivet |
| 942 | Nameplate (Type) |
| | |
| PARTS FOR DB-TYPE | |
| 306 | 2nd gear |
| 307 | 3rd gear |
| 310 | Hex. nut |
| 311 | Spring washer |
| 308 | Center plate |
| 312 | Ball bearing 10 |
| 313 | Ball bearing 11 |

# EXPLODED VIEW AND PARTS NAMES (ASSEMBLY PARTS)

## 1 TOP HOOK ASS'Y

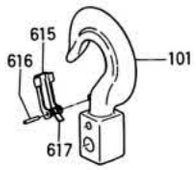


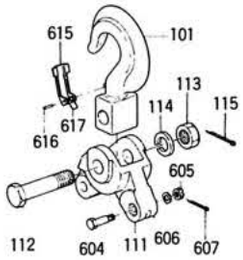


| | |
|---|---|
| 101 | Top hook |
| 615 | Safety latch |
| 616 | Safety latch pin |
| 617 | Safety latch spring |

| | |
|---|---|
| 101 | Top hook |
| 111 | Arm |
| 112 | Connecting bolt |
| 113 | Hex. nut |
| 114 | Spring washer |
| 115 | Cotter pin |
| 604 | Chain anchorage bolt |
| 605 | Hex. nut |
| 606 | Spring washer |
| 607 | Cotter pin |
| 615 | Safety latch |
| 616 | Safety latch pin |
| 617 | Safety latch spring |

## 7 LOAD SHEAVE ASS'Y


| | |
|---|---|
| 401 | Load sheave |
| 415 | Oil seal B |

## 15 BOTTOM HOOK ASS'Y

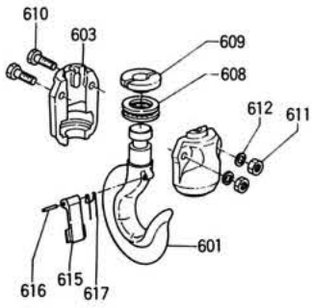


| | |
|---|---|
| 601 | Bottom hook |
| 603 | Bottom hook cover |
| 608 | Thrust bearing |
| 609 | Bottom split ring |
| 610 | Hex. bolt |
| 611 | Hex. nut |
| 612 | Spring washer |
| 615 | Safety latch |
| 616 | Safety latch pin |
| 617 | Safety latch spring |

## 16 LIMIT SWITCH ASS'Y

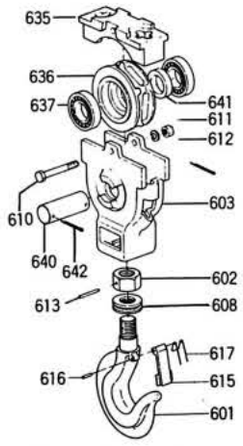


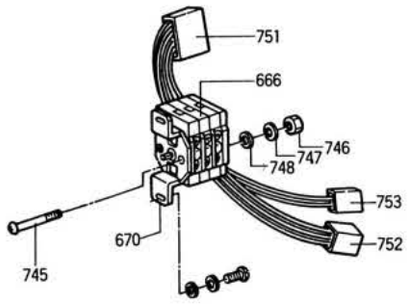


| | | | |
|---|---|---|---|
| 601 | Bottom hook | 637 | Bearing |
| 602 | Bottom hook nut | 640 | Idle sheave pin |
| 603 | Bottom hook cover | 641 | Idle sheave collar |
| 608 | Hex. bolt | 642 | Cotter pin |
| 611 | Hex. nut | | |
| 612 | Spring washer | | |
| 613 | Spring pin | | |
| 615 | Safety latch | | |
| 616 | Safety latch pin | | |
| 617 | Safety latch spring | | |
| 635 | Bottom hook chain guide | | |
| 636 | Idle sheave | | |

| | |
|---|---|
| 666 | Rotary switch |
| 670 | Rotary switch board |
| 745 | Pan head small screw w/cross hole |
| 746 | Hex. nut |
| 747 | Spring washer |
| 748 | plain washer |
| 751 | Receptacle 6P w/wire |
| 752 | Receptacle 4P w/wire |
| 753 | Receptacle 2P w/wire |

# INSTALLATION OF THE CHAIN BUCKET

## HANGING TYPE CHAIN BUCKET

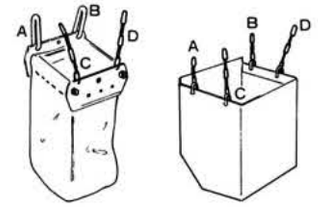


Magnified view of parts A and B after the chain bucket is installed

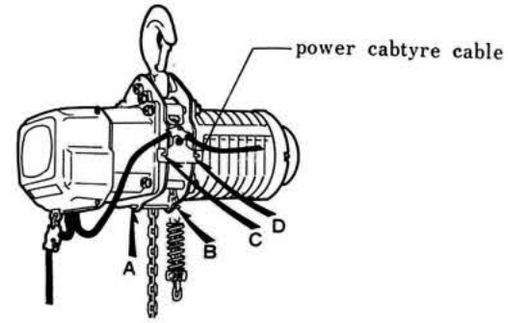


How to install the chain bucket at part D (or C)

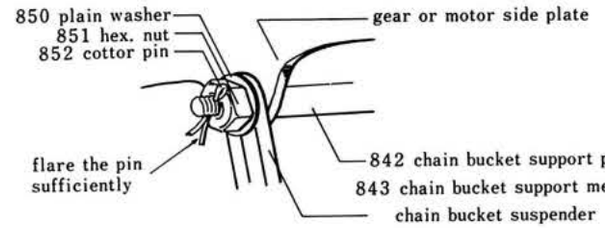


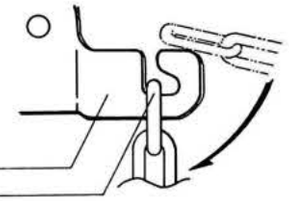

The chain hoist is shipped with 850, 851, and 852 attached to 842. The bucket has to be hung on the main body at each of the four places (A, B, C, and D) as shown above. The cotter pin 852 must be flared open to the full to prevent it from coming off.
When fastening C and D, make sure that the power cabtyre cable is not passed between the suspenders.

## BOLTED TYPE CHAIN BUCKET

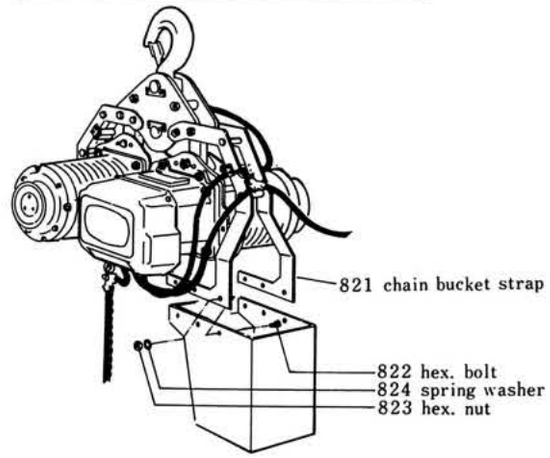


7.5 ton models are each fitted with one chain bucket and 10 ton models each with two chain buckets (The left figure shows a 10 ton model.)
One bucket is secured to 821 with six sets of 822, 823, and 824. The straps 821 hold the chain bucket from outside. 822 is thrust out from the bucket and fastened with 823 and 824 on the outside.

** When you change the hoist's load chain to a longer one, please contact us and ascertain that the chain bucket has enough capacity. If not, please change the chain bucket, when you change the load chain, to a proper one we propose.

# POINTS TO NOTE FOR POWER SUPPLY

* NEGATIVE PHASE PROTECTION *

If the push-button control for lifting and lowering is found inoperative (or if only control of the up-and-down motion fails when the hoist is provided with electric trolley or saddle) after plugging in the hoist, the negative phase protection device is at work. This device prevents the chain hoist from operating in the opposite directions to the push button instructions, and also ensures that the overwinding limit switch to check over-lifting and over-lowering functions properly.
If no up-and-down motion is produced after the chain hoist is plugging in, in accordance with the left figure below, change the connection of the black and red wires as shown in the right figure.

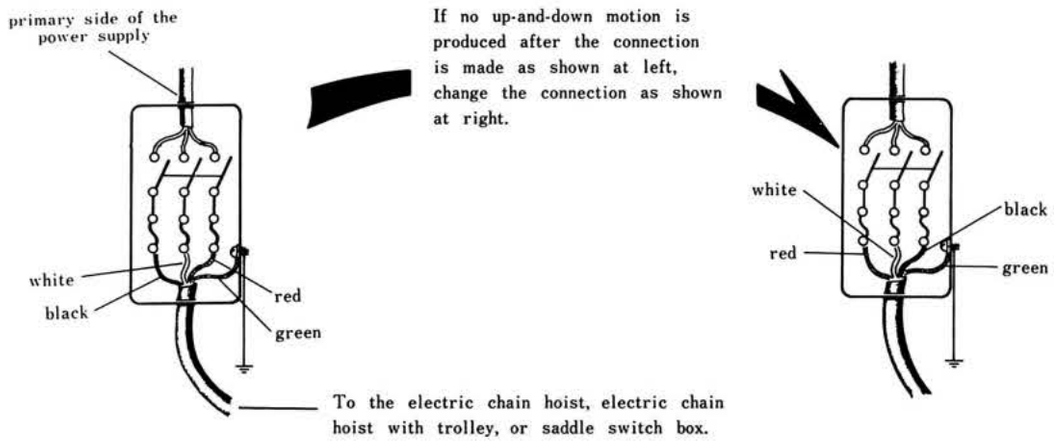


* POWER SWITCH AND FUSE

The power switch is to be used exclusively, not to be shared with any other electric apparatuses.

Electric chain hoist and electric chain hoist w/geared or plain trolley
—2-pushbutton type —

| Models | lifting motor -(kw) (3 phase 200V) | | power switch capacity (A) | fuse capacity (A) |
|---|---|---|---|---|
| | 50Hz | 60Hz | | |
| 0.25 | 0.37 | 0.45 | 15 | 10 |
| 0.5・1W | 0.67 | 0.8 | 20 | 10 |
| 1S・2W | 1.25 | 1.5 | 20 | 15 |
| 1.5・2S・2.5<br>3・5・7.5 | 2.5 | 3.0 | 30 | 30 |
| 10 | 2.5× 2 units | 3.0× 2 units | 60 | 50 |

Electric chain hoist with electric trolley
—4-pushbutton type —

| Models | lifting motor | traversing motor -(kw) (3phase 200V 50Hz) | power switch capacity (A) | fuse capacity (A) |
|---|---|---|---|---|
| 0.25 | refer to the table above | 0.18 | 20 | 10 |
| 0.5 | | 0.18 | 20 | 15 |
| 1W | | 0.4 | 20 | 15 |
| 1S・2W | | 0.4 | 30 | 30 |
| 1.5・2S | | 0.4 | 60 | 50 |
| 2.5・3 | | 0.75 | 60 | 50 |
| 5 | | 0.75 | 60 | 50 |
| 7.5 | | 0.75× 2 units | 60 | 50 |
| 10 | | 0.75× 2 units | 100 | 75 |

Both the power switch and the fuse capacities shown in the above tables may serve as standards but are not in all cases appropriate. Operate your chain hoist with a cargo equivalent to the working load hung on it (push the Lift and Traverse buttons simultaneously in the case of a 4-pushbutton type) and check the fuse to see if it exhibits anything unusual. If the fuse should blow out, upgrade the fuse capacity by one rank.

* THICKNESS OF THE POWER SUPPLY CABTYRE CABLE *

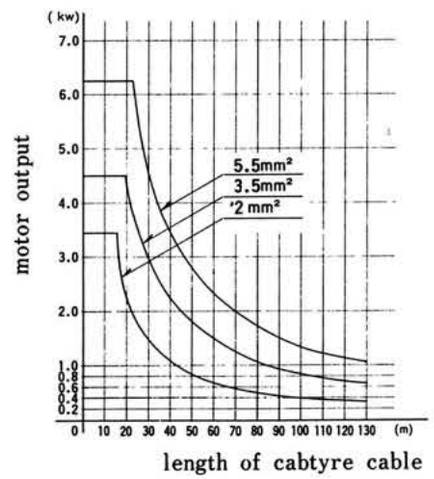


The thickness of the power supply cabtyre cable, which is measured in square millimeters, needs to be proportionate to both the motor output and the length of the cable.
From the left diagram you can find the relationship between the motor output and the cabtyre cable length for sectional area of 2mm², 3.5mm², and 5.5mm² cables.
Locate on the vertical axis the point corresponding to the motor output, i.e., the total output of the lifting motor and traversing motor for a 4-pushbutton controlled electric chain hoist with electric trolley, or the output of the lifting motor for a 2—push—button controlled model.

Then draw a holizontal line there from the left to the right and locate the point where the line meets each curve.
The abscissa of the point represents the limit to the length within which the corresponding cable must be used.

# CHECKING BEFORE STARTING YOUR DAILY WORK

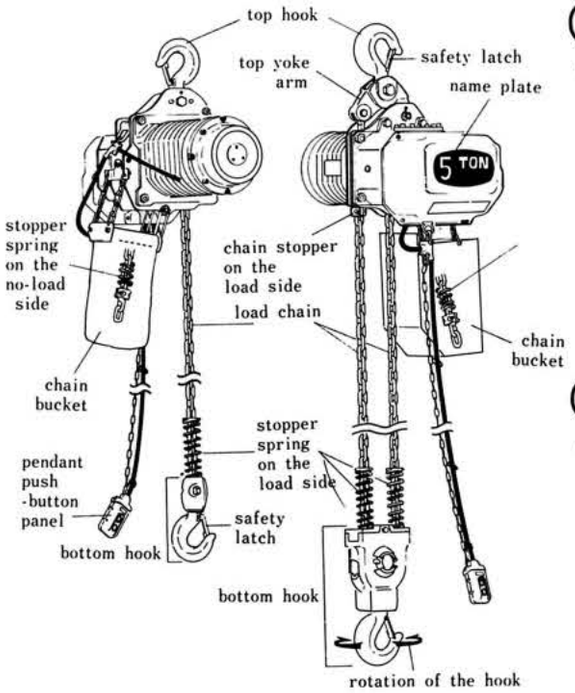


## 1. TOP HOOK AND TOP YOKE

Check to see if:

* The safety latch is in order and functions perfectly.
* The hook and its associate parts exhibit any visible damage or deformation.
* The idle sheave, if provided, rotates smoothly and is in good mesh with the load chain.
* The set-bolts, nuts, and cotter pins are loose or missing.

## 2. BOTTOM HOOK

Check to see if:

* The safety latch is in order and functions perfectly.
* The hook rotates lightly and smoothly.
* The hook and its associate parts exhibit any visible damage or deformation.
* The bolts and nuts are loose or missing.
* The idle sheave rotates smoothly and is in good mesh with the load chains in the case of a model with two or more falls.
* The hook block is stained with much foreign matter.

## 3. STOPPER SPRINGS (BOTH LOAD SIDE AND NO-LOAD SIDE)

*Reduction in the free length of stopper springs. For safety and perfect functioning of switch springs they need to be replaced with new ones when their free length becomes smaller than the limit value shown in the table below.

| single-speed type | | | dual-speed type | | |
|---|---|---|---|---|---|
| Models [ton] | initial free length [mm] | limit [mm] | Models [ton] | initial free length [mm] | limit [mm] |
| 0.25 | 95 | 80 | 0.25 | 95 | 80 |
| 0.5 | 135 | 120 | 0.5 | 135 | 120 |
| 1S | 145 | 130 | 1S | 170 | 150 |
| 1W | 135 | 120 | 1W | 135 | 120 |
| 1.5 | 170 | 150 | 1.5 | 195 | 170 |
| 2S | 172 | 160 | 2S | 180 | 162 |
| 2W | 145 | 130 | 2W | 170 | 152 |
| 2.5 | 172 | 160 | 2.5 | 180 | 162 |
| 3 | 170 | 160 | 3 | 195 | 170 |
| 5 | 172 | 160 | 5 | 180 | 162 |
| 7.5 | 172 | 160 | | | |
| 10 | 172 | 160 | | | |

free length L : overall length of a stopper spring under no load.

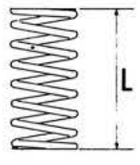


distortion

* Distortion of stopper springs. Each stopper spring needs to be replaced with a new one if so distorted that it catches on the load chain and fails to fall smoothly down to the hook block.

## 4. NAME PLATE

* Check the name plate to see if it is easy to read. If it is contaminated, clean it up. It is good practice to keep it always clean.

## 5. CHAIN BUCKET

Check to see if:

* The chain bucket is damaged.
  (There should be no danger of the load chain falling off.)
* The parts that serve to hang the chain bucket are correctly fitted.
* There is dust or water collected in the chain bucket.
* The stopper spring on the no-load side is free from reduction in the free length or distortion.
  (Check by measuring the free length of the spring.)

## 6. LOAD CHAIN

Check to see if:

* The load chain is oiled enough to the full extent.
* The load chain exhibits any noticeable damage.
* The load chain is looped or kinked.

## 7. PENDANT PUSHBUTTON PANEL

Check to see if:

* The case exhibits any crack or fracture.
* Every pushbutton can be pressed smoothly or the pressed button returns upward smoothly when it is released.
* Every pushbutton is stained with much foreign matter.

## TROLLEY

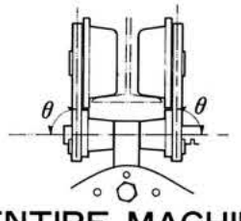


Check to see if:

* The side-plates are free from deformation.
* The angle $\theta$ in the figure at left is 90 degrees.
* The trolley produces noises when it traverses. If it produces any noise, oil the trolley.
* Any bolt or nut is loose or missing.
* The wheel, if toothed, exhibits a collection of dust at the teeth.

## ENTIRE MACHINE (FINAL CHECK)

* Check to see if the machine moves in the correct direction according to the instruction from the push-button panel.
* Check to see how long the hook moves until it stops after each pushbutton is released.
* Check to see if the overwinding limit switches for lifting and lowering function correctly.
* Check to see if the machine produces any unusual noise in each operational mode. (It is normal if the machine produces clicks during lifting but not during lowering.)

# PERIODIC CHECK AND REPLACEMENT OF PARTS

**IMPORTANT !**

The periodic check requires the machine to be disassembled. Before proceeding to disassemble the machine, be sure to take the following steps for safety.

1. Unload the bottom hook.
2. Lower the bottom hook down to a height, about 10cm above the lower acting point of the overwinding limit switch.
3. Turn the power off.

## 1. MOTOR BRAKE : Check every six or less months or when the brake begins to slip.

Figure 1

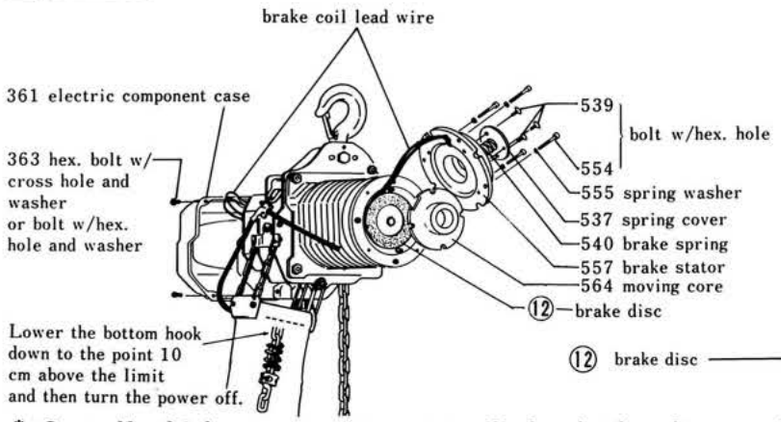


Figure 2

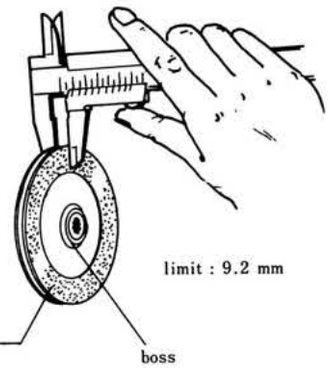


* Overall thickness measurement of the brake disc ass'y 12 *
The overall thickness of the brake disc ass'y 12 must be greater than 9.2 mm when measured as shown in Figure 2 above. Replace it with a new one if the thickness is found smaller than the limit.
(initial thickness: 10mm)

Procedure of disassembly

1. Remove 539, 537, and 540 in this order.
2. Remove 363 and 361.
3. The lead wires of the brake coil are sufficiently long to make the disassembly of the motor brake easier. It is not easy to draw them toward the motor if they are tucked in the electric component case. Therefore, adjust their position and posture so that they can be easily moved.
   Note: The crimp-type terminal of the cable does not need to be removed. Never touch any bare part of the cable, since it may holds static electricity even when the power is off.
4. Remove 554 and 555 and pull off 557 together with the cable. Be careful not to drop 564. Put 557 on the motor case, not suspending it from the lead wire of the brake coil.
5. Remove the brake disc ass'y 12 from the motor shaft, and measure its overall thickness as shown in Figure 2.
6. The ball bearing 252 has been greased. After the brake disc set is removed, visually check it to see if there is the trace of grease on it.

Procedure of reassembly

1. Set the brake disc set 12 -- the one that has passed the periodic check or a new one - on the motor shaft. Be careful then to put the set so that the side with a boss, which is shown in Figure 2, faces the motor case. (It is O.K. if the boss is invisible when the set is placed as shown in Figure 1.)
2. Set 564 in place.
3. Set 557 in place. At this time pull the brake coil lead wire firmly from the electric component side to prevent them from being caught.
4. Secure 557 with 554 and 555.
5. Fasten 361 back with 363. Take care not to have the lead wires, etc. caught.
6. Repalce 540. 537, and 539 in this order.

## 2. LOAD CHAIN : Check every month or more frequently.

Figure 3

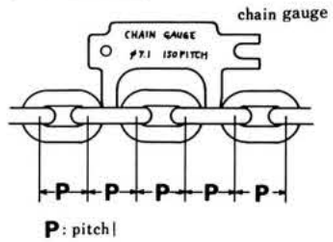


Figure 4

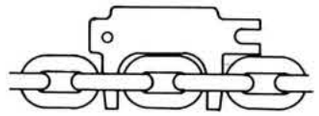

Figure 5

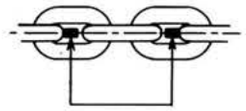

correct chain gauge position (hatched parts)
Align the legs of the chain gauge with the center line (broken line) and insert them into the links.

* Pitch measurement with a chain gauge *

Every load chain needs to be checked not in part, but to the full extent carefully. Check the chain for an increase in pitch by inserting a chain gauge at intervals of about 50cm (See Figure 3.). Where the pitch is within the allowable limit, the gauge's legs cannot go through the links (See Figure 3). But the legs go through the links if the pitch exceeds the limit (See Figure 4).
If a pitch is found to be very close to the limit, check the neighboring pitches at shortened intervals to see if any link allows the gauge's leg to go through it. If the gauge's leg goes through any one link, the load chain must be replaced with a new one.

* Link chain diameter measurement with chain gauge *

Figure 6

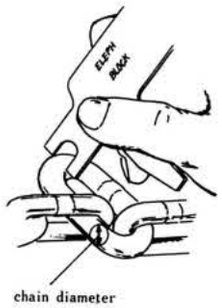


The load chain is dangerous if its links are slim due to corrosion. If the chain diameter of any link gets smaller than the allowable limit, replace the load chain with a new one.
Set the chain gauge on a link as shown in Figure 6. If the gauge's mouth fits on the link, it indicates that the chain diameter is below the allowable limit. Replace the load chain with a new one.

Table 1 models, normal chain diameter, and pitch (mm)

| models | chain dia (mm) | pitch (mm) | 1S, 2W | 7.1 | 21 |
|---|---|---|---|---|---|
| 0.25 | 5.6 | 17 | 1.5, 3 | 9.5 | 28.6 |
| 0.5, 1W | 6.3 | 19 | 2S, 2.5 3, 5, 7.5, 10 | 11.2 | 34 |

* Visual check of the load chain *

Any load chain has to be replaced with a new one if exhibits any flaw, deformation, or fused foreign matter.
Also, any load chain has to be replaced with a new one if it shows a noticeable indication of heat influence.

Replacement of the Load Chain * POINTS TO PAY ATTNTION *

The following points must be observed when a load chain is replaced.

Continued on next page

Figure 7

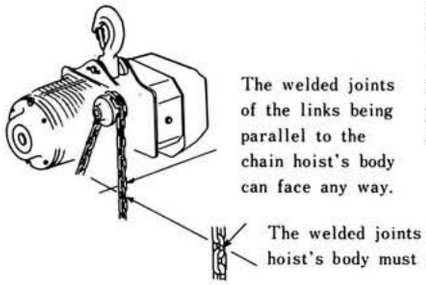


The welded joints of the links which are perpendicular to the chain hoist's body must face opposite to the load sheave (See Figure 7).
If the number of load chain's fall is two or more, the first link to be secured with a chain stop pin must be perpendicular to the chain hoist's body so that the load chain may not kink.

## 3. CHAIN STOP PIN: Check every month or more frequently

-- this check is not needed for any model with a single load chain

Figure 8

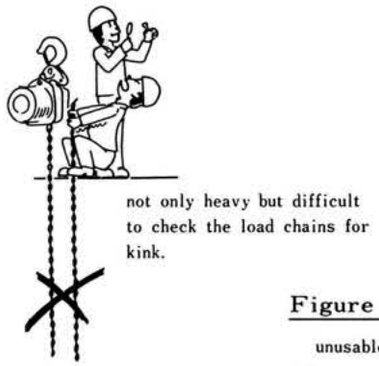


Figure 9


The end of the load chain on the load side is being secured to the top yoke arm with a chain stop pin for 2-fall models and to the hook block for 3-fall models.
This pin is taken off and checked for deformation. This check has to be done after securing a good support for the weights of the hook block and load chains, otherwise there is a danger of their falling off.
For 2-fall models (Figure 8) it is easier to carry out the check after lifting the hook block as close to the upper limit as possible, and after laying the bottom hook block on the ground for 3-fall models.
If the chain stop pin shows a clearly visible bend or deformation at the point in contact with the load chain, it must be replaced with a new one (See Figure 9).
Take care not to make a kink in the load chain when the pin and load chain are restored to place.
Observe as well that if the same pin is used again, it should de placed so that it may come in contact with the load·chain at exactly the same spot as before.

## 4. CHAIN STOPPER : Check every month or more frequently.

Figure 10

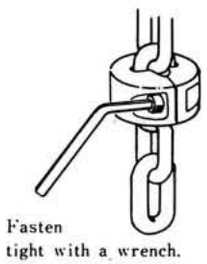


Figure 11

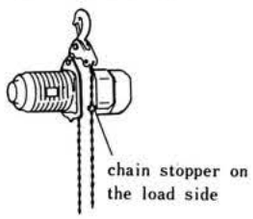


Secure the stopper to the 3rd link from the end on the no-load side.

Check the chain stopper every month to make sure its bolts w/hex. hole are not loose.
On the no-load side the chain stopper must be fixed to the 3rd link from the end of the load chain (See Figure 10).
The chain stopper is also provided on the load side only for 2-fall models; and it must be secured to the link specified for each model in Table 2.

Table 2 Chain stopper position on the load side

| | | | |
|---|---|---|---|
| 1W | 8th link from the end | 3 | 9th link from the end |
| 2W | 8th link from the end | 5 | 7th link from the end |

## 5. GEAR OIL : Check every six or less months.

Figure 12

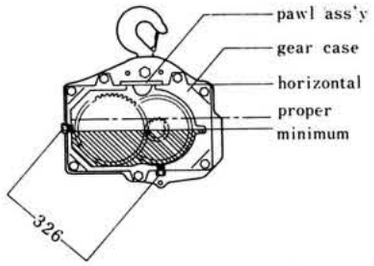


Gear oil is required to have reached at least the height of the side oil plug (326) of the gear case when the top of the gear case is horizontal.
For oil replacement unscrew the bottom oil plug (326) to drain the case, screw it back on, remove the pawl ass'y and refill the case with new oil. However, the mechanical brake does not work while the pawl ass'y is off. Therefore the replacement must be done under no load and when the motor brake has been completely set up.
The oil grows bad before the gears get smooth in the beginning. Therefore the gear oil needs to be replaced after about six month's use. After that, it is sufficient to supply the deficiency unless there is unusual change in quality.

Table 3 Gear oils recommended

| | |
|---|---|
| Genuine oil | Shoseki AR-180 |
| Alternatives | Shell Tonna oil T-180<br>Maruzen Swaway S-180<br>Mitsubishi Diamond Slideway 180 |

Table 4 Oil supply required (proper amount in liter)

| | 0.25 | 0.5,1W | 1S, 2W | 1.5, 25, 2.5, 3, 5, 7.5 | 10 |
|---|---|---|---|---|---|
| single speed type | 0.75 | 0.8 | 1 | 3 | 3 × 2 |
| dual speed type | 0.75 | 0.8 | 1.3 | 3.5 | - |

## 6. HOOKS : Check every month or more frequently.

Points to observe for both the top and bottom hooks

* Measurement of the opening of each hook *

Figure 13

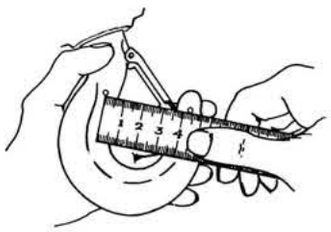

The opening of a hook becomes wider if it is loaded with a weight far exceeding the working load or its tip is heavily loaded.
Hooks thus widened in opening need to be replaced with new ones because they have already lost adequate strength and impact absorbency which are essentially required of them. Each hook has two projections designed to serve for checking its opening. Measure the distance between these projections for each hook in periodic checking, and if the measurement is over the limit, replace the hook with a new one. (See Figure 13)
Hooks have been manufactured by heat-treating hot-forged material in order for them to have the optimum characteristics. Accordingly, they are slightly different from each other in dimensions. Hence,they can be checked more correctly for their opening's size if the checking is made based on the initial value they showed before put in use. (See Table 5)

Table 5 Distance between two projections on a hook (center-to-center distance)

| working load (t) | 0.25 | 0.5 | 1 | 1.5 | 2 | 2.5 | 3 | 5 | 7.5 | 10 |
|---|---|---|---|---|---|---|---|---|---|---|
| manufacture's standard (mm) | 40±1 | 47±1 | 54±1 | 70±1 | 70±1 | 70±1 | 75±1 | 90±1 | 120±1 | 120±1 |
| measurement before use (mm) | | | | | | | | | | |
| limit (mm) | 42 | 49.5 | 57 | 73.5 | 73.5 | 73.5 | 79 | 94.5 | 126 | 126 |
| | or 1.05 times the measurement before use | | | | | | | | | |

It is very dangerous to re-use any wide-opened hook by tempering it. It must be put out of use and replaced with a new one.

* Flaw, wear, and distortion of hooks *

Hooks showing such defects as shown in Figure 14 (1), (2), (3) need to be replaced.

Figure 14

(1) sharp cut

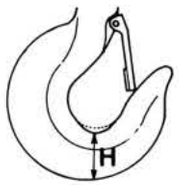


(2) wear (See Table 6)

(3) noticeable distortion

Table 6 Wear limit of hooks

| working load (t) | H measured before use (mm) | limit (mm) | working load (t) | H measured before use (mm) | limit (mm) |
|---|---|---|---|---|---|
| 0.25 | 18 | 16.2 | 2.5 | 35 | 31.5 |
| 0.5 | 19 | 17.5 | 3 | 49 | 44.1 |
| 1 | 25 | 22.5 | 5 | 53 | 47.7 |
| 1.5 | 35 | 31.5 | 7.5 | 62.5 | 59.3 |
| 2 | 35 | 31.5 | 10 | 62.5 | 59.3 |

* Idle sheave *

-- One-fall models have no idle sheave.

Figure 15

Check the shape of shaded areas.

If the idle sheave is stained with much foreign matter, disassemble and clean it. Then check it to see if:
1. Its bearing and shaft exhibits anything unusual.
2. Foreign matters have collected in its pocket section.
3. Its projections are deformed. (See Figure 15)

Be sure to grease up every rotating part when reassembling the idle sheave.

If the idle sheave is kept clean, visually check its projections for deformation.

points to observe for bottom hooks

* Thrust bearing *

Figure 16

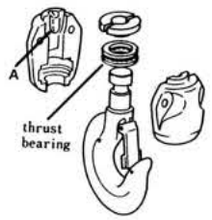


If the rotation of the hook is not smooth or the gap shown in Figure 17 is over 2 mm, take it apart and replace defective components with new ones. The thrust bearing alone can be replaced in some types, but be careful not to mount it upside down. The side with a larger bore must face downward.
Also, if the bottom hook cover exhibits a deformation outstanding enough to be visually ascertained, at the part indicated by the arrow A in Figure 16, replace it with a new one.

Figure 17

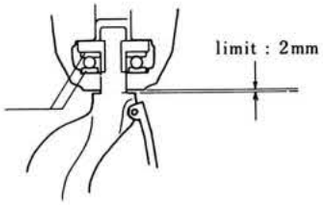


## TROLLEY

**7. TROLLEY WHEELS: Check the wheels for wear every six or less months.**

Such trolley wheels as shown in Figure 18 need to be replaced with new ones.

Figure 18

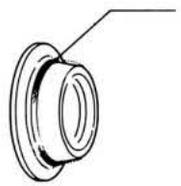

trolley wheel that shows a visible height difference at the part which comes in contact with the edge of the I-beam.

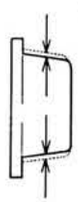

trolley wheel that has worn by more than 5% of the original size.

trolley wheel that exhibits visible partial wear at the tread.

**8. SIDE ROLLERS: Check the rollers for wear every month or more frequently.**

-- The rollers are not provided in any models other than those of a 2.5 tons or more capacity that are equipped with electric trolley.

Figure 19

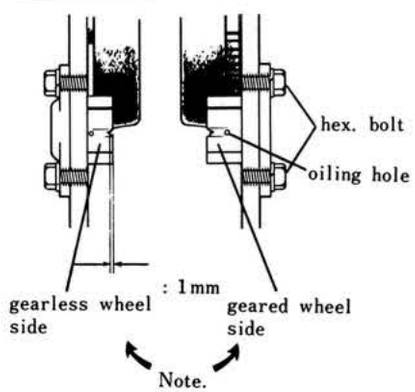


Side-rollers undergo gradual wear where they come in contact with the lower flange of the I beam. Those showing wear of over 1 mm must be replaced. Those whose rotation is not smooth owing to rust or dirt must be dismantled and cleaned. Remove the two hex. bolts shown in Figure 19. Then remove the rollers together with the cradles and wash them with kerosene, etc. Take care not to confuse those for geared wheel side with those for gearless wheel side in parts replacement or when re-mounting them after cleaning. Also, be sure to oil them well for their smooth rotation.

# WIRING DIAGRAMS

| | | | |
|---|---|---|---|
| TR | Transformer | M−D | Magn. contactor (Pushbutton DN) |
| AP | Negative phase protector | M−DH | Magn. contactor (Pushbutton ⬇⬇) |
| DPM | DC power module | M−DL | Magn. contactor (Pushbutton ⬇⬇) |
| MB | DC brake | M−R | Magn. contactor (Pushbutton R or W) |
| L−U | Upper limit switch | M−L | Magn. contactor (Pushbutton L or E) |
| L−D | Lower limit switch | M−S | Magn. contactor (Pushbutton S or L) |
| M−U | Magn. contactor (Pushbutton UP) | M−N | Magn. cohtactor (Pushbutton N or R) |
| M−UH | Magn. contactor (Pushbutton ⬆⬆) | LM | Lifting motor |
| M−UL | Magn. contactor (Pushbutton ⬆⬆) | TM | Traversing motor |

## DA 2-PUSHBUTTON (DA·DAG·DAP)

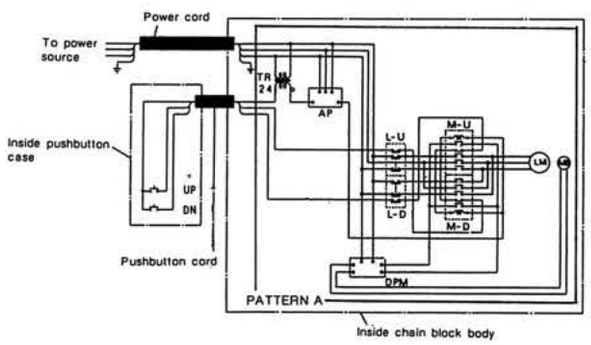


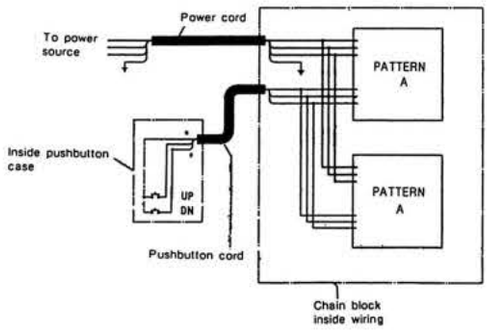


## DB 2-PUSHBUTTON (DB·DBG·DBP)

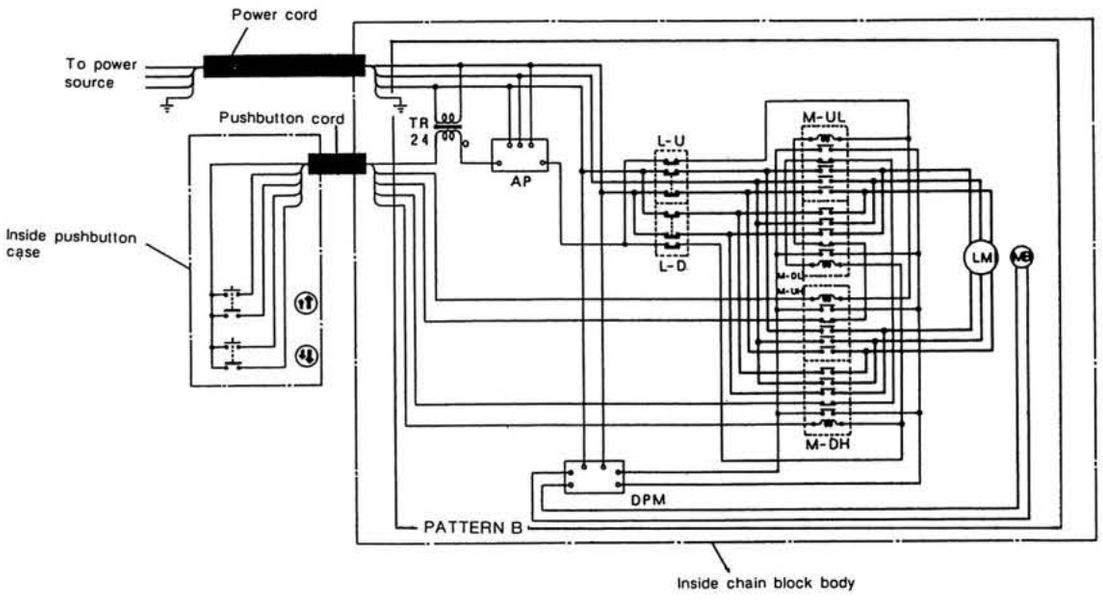


## DA 4-PUSHBUTTON(DAGC·DAPC)

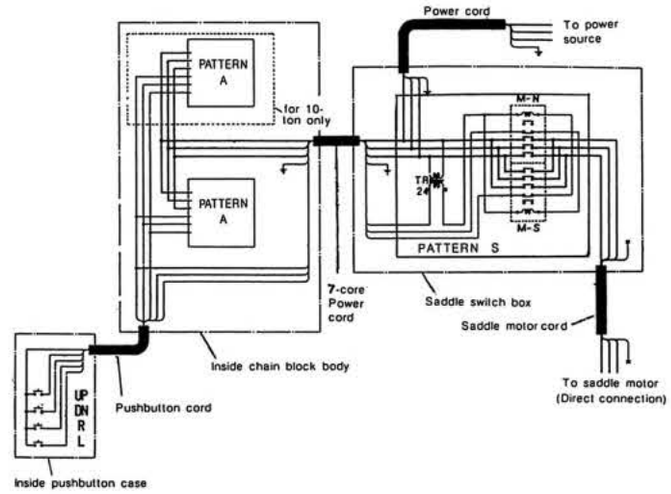


## DB 4-PUSHBUTTON (DBGC·DBPC)

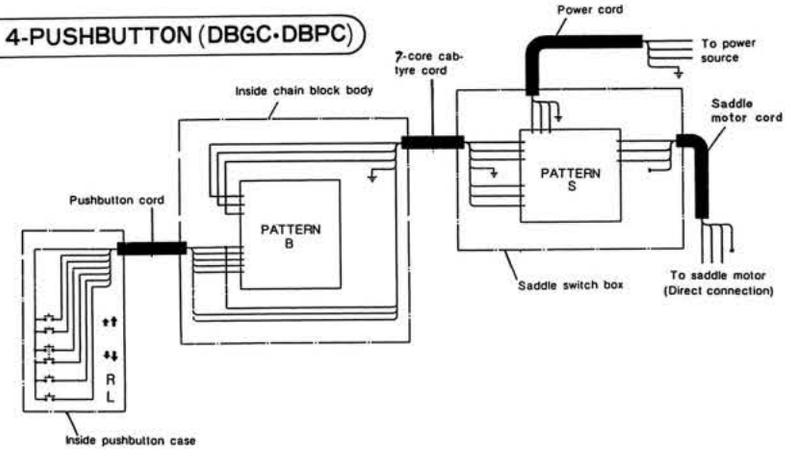


## DA 4-PUSHBUTTON (DAM)

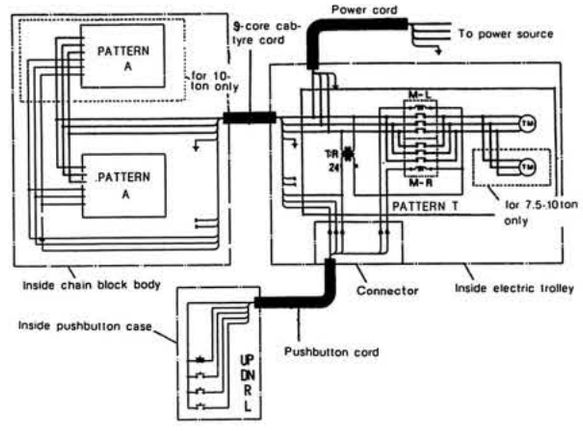

## DB 4-PUSHBUTTON (DBM)

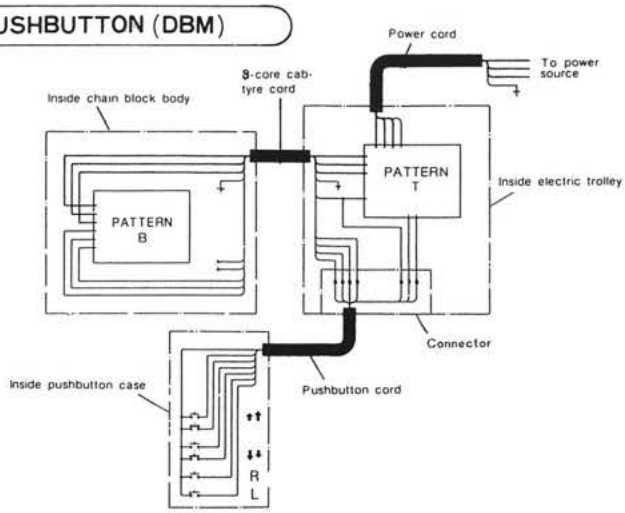


## DA 6-PUSHBUTTON (DAMC)

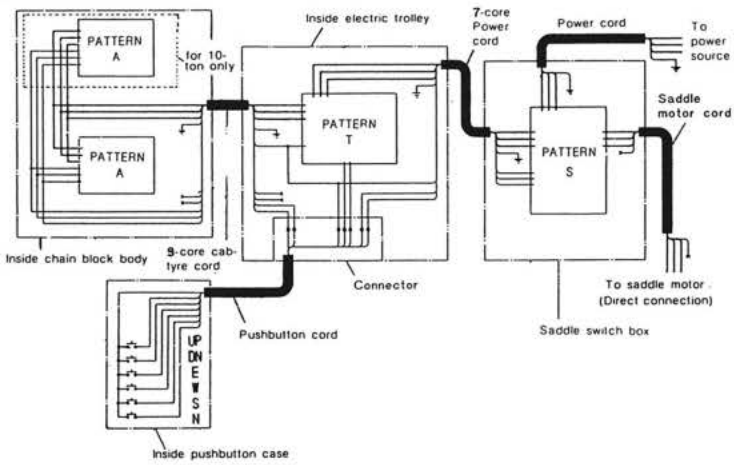


## DB 6-PUSHBUTTON (DBMC)

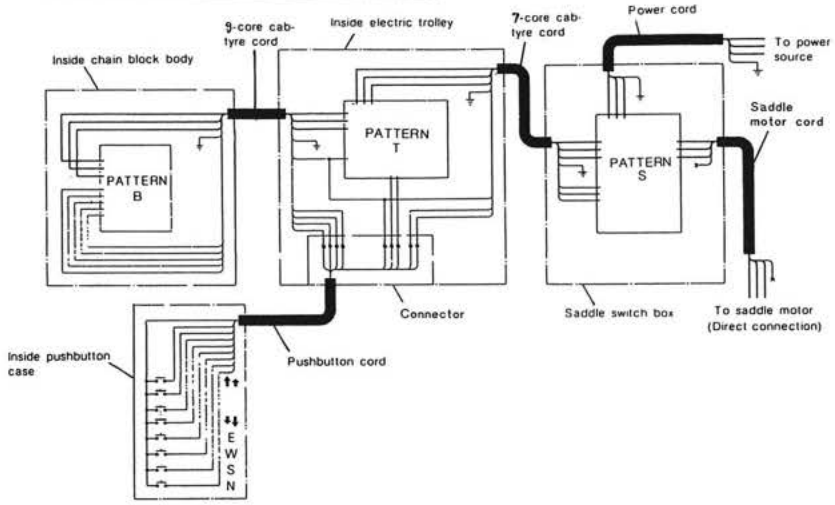

Please read this manual without fail before you install your electric chain hoist.
You are prohibited from riding on the ELEPHANT ELECTRIC CHAIN HOISTS.
Keep to the regulations concerning with the electric chain hoists in your country.

ELEPHANT ELECTRIC CHAIN HOIST

# OPERATION MANUAL

This Manual is applied to all the models.
(No. 2)

★ This manual contains the minimum number of items we would ask you to understand and put into practice so that you can make the best use and safely operate your electric chain hoist.
Please read this manual in addition to the operation manual for your model (separate volume) before installing your Electric chain hoist.

★ Please be sure to keep this Manual, operation manual for Your Model, and Inspection Certificate of Electric Chain Hoists for future use.

ELEPHANT CHAIN BLOCK CO., LTD.
Osaka, Japan

# CONTENTS

# CHAPTER 1 PRECAUTIONS ON INSTALLATION OF THE ELECTRIC CHAIN HOIST

## 1. 1. Confirmation of your Chain Hoist on Delivery

★ Make sure you have received the same electric chain hoist as you specified. Make sure the following items printed on the case are as specified.

| | |
|---|---|
| 1 Model | |
| 2 Power Source | Single Phase 100V, Three Phases 200V, etc. |
| 3 Rated Load Capacity | 0.5t, 1t, 3t, .....etc. |
| 4 Type of Trolley (If Provided) | Plain Trolley, Geared Trolley, etc. |
| 5 Lifting Height | 3 m, 6 m, etc. |
| 6 Push-Button Number (Single-Speed or Dual-Speed Type) | 4-Button Type, 6-Button Type, etc. |
| 7 Pendant Push-Button Panel Cord Length | 3 m, 6 m, etc. |
| 8 Power Cord Length | 5 m (If not specified) |

★ Check if there have been any damge caused during transportation.
★ Refer to Table 1 to make sure you have received the prescribed attachments and documents.

Table 1 Attachments and Documents

| | |
|---|---|
| Overall Operation Manual (this Manual) | 1 copy |
| Operation Manual for Your Model | 1 copy |
| Inspection Certificate of Electric Chain Hoist | 1 copy |
| Chain Gauge | 1 piece |
| Chain Bucket | Required number |
| Cable Hanger (for messenger wire) | ✓ |

✓ 3 pieces of cable hangers are attached only when your chain hoist is the one with trolley.

If there should be any problem with the above-mentioned asterisked items, please contact your dealer at once.

## 1. 2. Use of Your Chain Hoist under Specific Conditions

Your electric chain hoist should not be used in the environment that is exposed to a possible danger of explosion. Please consult your dealer when you use your chain hoist under specific conditions, such as high temperature (hotter than 40℃), low temperature (colder than -20℃), high humidity (more than 90%), or chemical effects, etc.

Under low-temperature conditions you have to allow much more for capacity particularly, considering that metal gets fragile.

## 1. 3. Power Supply

Please refer to detailed explanations on power supply in the Operation Manual for Your Model.
The performance of the electric chain hoist greatly depends on the conditions of power source and power supply, and the use of the chain hoist under extremely bad conditions of power source and power supply will lead to immediate trouble with it or could cause over-heating of power supply materials, resulting in fire.
And grounding work of the third kind (earthing) is essential, which requires qualified person(s) in charge of electrical engineering work.
If you continue to use your chain hoist in one particular place instead of using it in different locations, we would like you to ask a special electrical engineering firm for power supply work.
If you use your chain hoist in some different places we would like you to fully understand the items mentioned in the Operation Manual for Your Model.
When you ask your local special electrical engineering firm for power supply work, please show them the items mentioned in the Operation Manual for Your Model.
Their understanding of the properties of your electric chain hoist will assure proper power supply work.
Please prepare for a test some cargo corresponding to the rated working load of your electric chain hoist.
After the power supply work is completed, voltage drop and others should be measured and tereby checked in test operation.

## 1. 4. Checking of Your Chain Hoist and Its Surroundings

★ Fromunpacking through the end of installation work

### 1. 4. 1. Load Chain

The load chain is, in some cases, bound together with wires or the like to prevent it from possible tangles and kinks in a package.
Remove all the wires before operating your chain hoist.
Remove all the pieces of wires, vinyl and notice tags, etc. to prevent them from being caught into the body of the electric chain hoist.
Please avoid using the load chain left knotted up or entangled.
(Refer to Fig. 1.)

Fig. 1

Remove tangles and knots from the load chain before operating your machine.

Some grease is applied on the load chain when your machine is shipped from our factory. Please take care to keep the load chain from foreign substances like mud. With the double fall type there are possibilities that the bottom hook will pass between the two load chains and result in their kinking. Avoid using the chains in kinked condition.
In this case, passing the bottom hook in the opposite direction between both the chains restores them to normal conditions. (Refer to Figs 2 and 3.)

Fig. 2

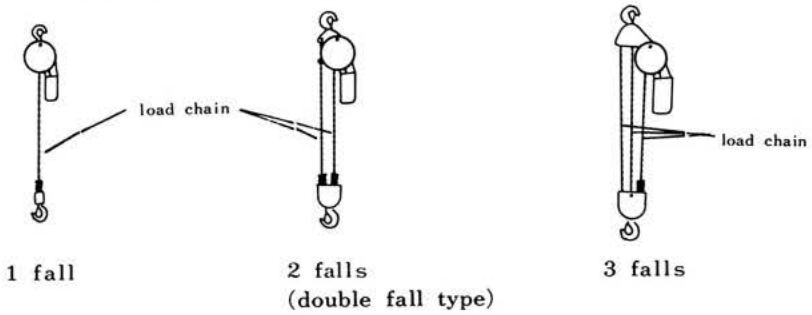


Fig. 3

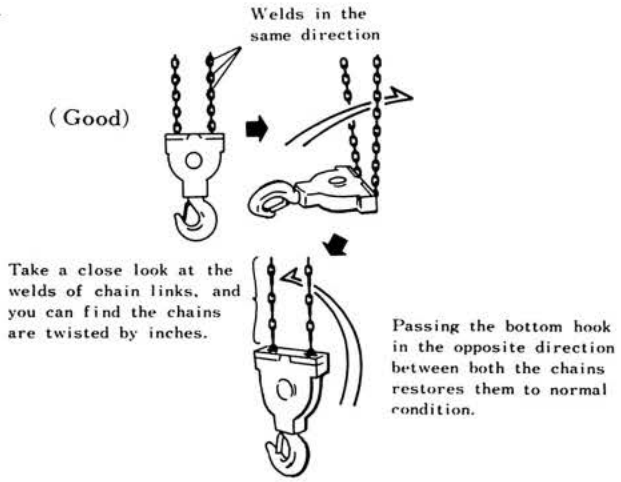


## 1. 4. 2. Fixing the Chain Bucket

The chain bucket should be fixed without fail. Without the chain bucket, the load chain of no-load side might be caught by hanging load or something, resulting in dangerous situation. (Refer to Fig. 4.)

Fig. 4

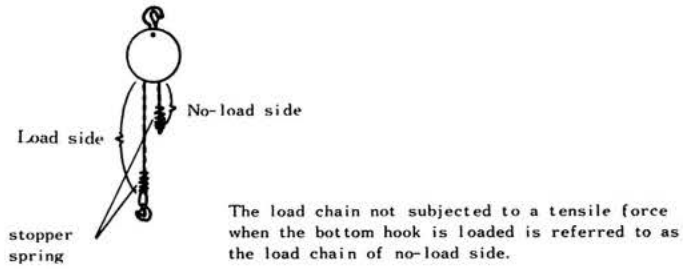

The chain bucket should be fixed to the chain hoist with the load chain of no-load side coming out 50 cm or less from the chain hoist. (Refer to Fig. 5.)
This assures sure housing of the load chain in the chain bucket as well as easy installation of the bucket.

Fig. 5

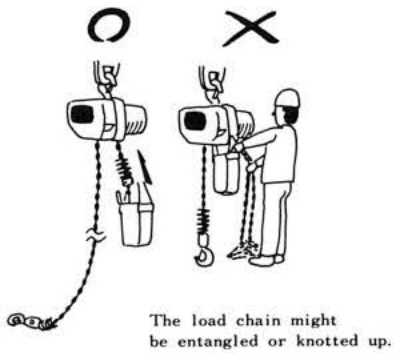


Be careful to fix the chain bucket so that it may hang right under the body of the chain hoist.
If the bucket is pushed upward by hanging load as shown in Fig. 6, the load chain will dangerously overflow the bucket or be unable to pass smoothly through the body of the chain hoist.

Fig. 6

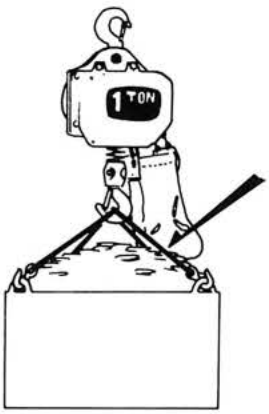


And it is also dangerous in the case that the chain bucket is too small compared with the total length of the load chain. When you have replaced the load chain with a longer one, you should confirm that the bucket matches the length of the new one. Please refer to the chart for fixing the chain bucket and table for selecting the optimum size of chain bucket according to the total length of the load chain in the Operation Manual for your Model.

### 1. 4. 3. Overwinding Limit Switch for Upper and Lower Limits

The overwinding limit switch must be installed to work in an emergency, but not in normal operation.

The switch has considerably long service life.
But if it is used too often in normal operation, it might cause serious accidents when it gets out of order and ineffective.
The built-in overwinding limit switch of the chain hoist should be set to function only in an emergency by installing another limit switch available on the market.
Inspect the limit switch before starting the work by operating the chain hoist in the lifting and lowering mode several times without any load (or without hanging any careo).

## I. 4. 4. Swinging of the Chain Hoist in Normal Conditions

The body of the chain hoist is designed to be used hanging right under the hook or trolley and swings a little as the polygonal load chain wheel, which is the part to transmit driving power to the load chain, spins. Don't prevent this natural swinging.
Operating the chain hoist with its body caught by something or directly fixed to something without using the hook impedes the above-mentioned swinging and results in extra power dangerously imposed upon each one of important parts. (Refer to Fig. 7.)
Use the chain hoist hanging perpendicularly in normal condition.

Fig. 7

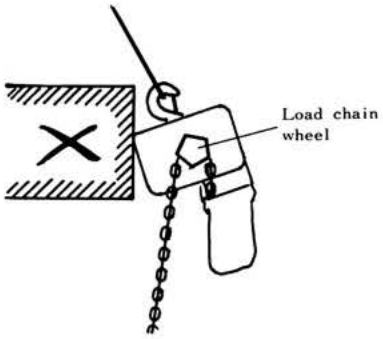


## I. 4. 5. Removal of Air from the Gear Case

A thumb screw or hexagonal bolt with side-to-side dimension of 17 mm is provided on the top of the gear case as shown in Fig. 8 for the model, the reduction gear section of which is oil-lubricated.
Remove the thumb screw or hexagonal bolt after installing the chain hoist. For the model that has a hexagonal bolt on the top of its gear case, replace the bolt with another hexagonal bolt with an air hole, which comes in a small vinyl bag.
The hexagonal bolt with an air hole serves to ventilate the gear case in response to the temperature change inside the gear section, thereby preventing the packing from deteriorating due to a high pressure.

Fig. 8

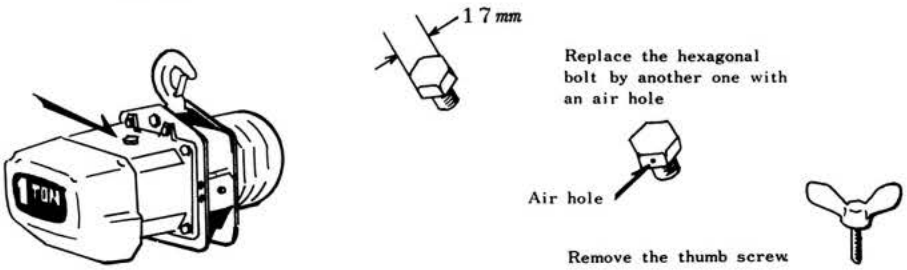

## 1. 4. 6. Preventing Your Chain Hoist from Being Exposed to Rain

Exposing your chain hoist to rain makes its service life extremely short. The chain hoist is designed to be safely operated even in the rain, but it won´t be safely operated if the grounding work of the third kind (Earthing) is neglected or is not completely performed. In order to prolong its service life, some refuge(covering) or other should be provided for the whole body of the chain hoist, if it is installed in the open air, to be completely protected from the rain. (Refer to Fig. 9) Take care to prevent rain water from pouring into the chain bucket, in the refuge.

Fig. 9

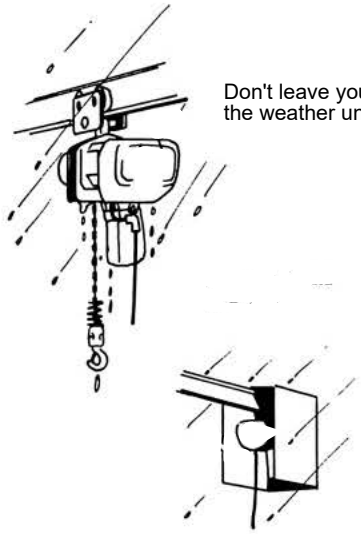

Don't leave your electric hoists in the weather unprotected!

Build a "makeshift" parking garage to protect your investment from the elements!

## 1. 5. Precautions for the Chain Hoist with Trolley

★From unpacking through the end of installation work

### 1. 5. 1. Trolley's Width Adjusting Collars

The trolley is designed to be capable of being installed on several types of traversing rails with different widths by moving the adjust collars.
Fit both sides of the connector to hang the electric chain hoist with the same number of adjust collars. Such wrong installation as shown in Fig. 10 might result in serious accidents.

Fig. 10

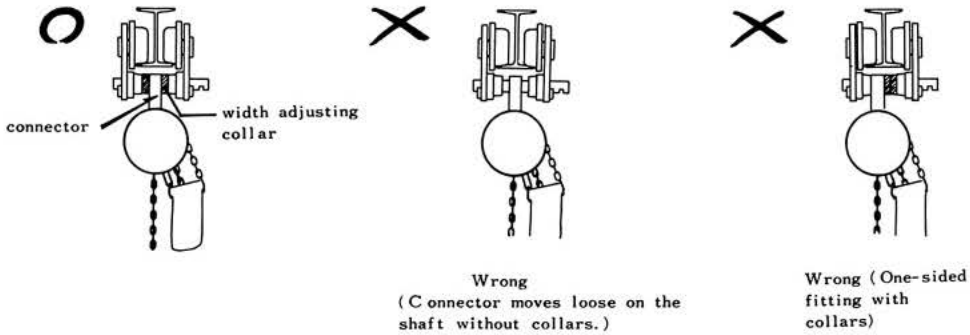


Wrong (Connector moves loose on the shaft without collars.)

Wrong (One-sided fitting with collars)

## I. 5. 2. Installation of the Chain Hoist on a Curved Traversing Rail

If you install your electric chain hoist with electric trolley or geared trolley on a curved traversing rail, set them with the motor or hand chain wheel of trolley being outside the curve.
Installing them with the motor or hand chain wheel being inside the curve could cause damage to the traversing rail and trolley´s wheel gear.
In the case of a traversing rail curving in both directions, install the chain hoist so that it may be in such a posture as shown in Fig. 11 at a curve with shorter radius. (Refer to Fig. 11)

Fig. 11

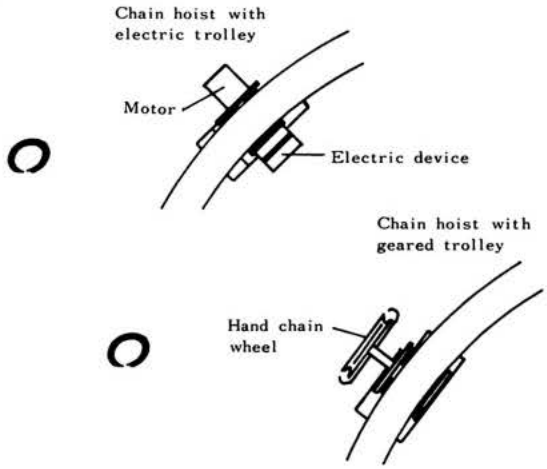

## I. 5. 3. Traversing Rail

- The part of the traversing rail in direct contact with the wheels of the trolley should not be coated with paint, and if it rusts too much, get the rust off.
- Joint of the traversing rail:
  1. Traversing rails had better be joined together close to the rail support.
  2. When you weld a fishplate on the bottom of the rail as shown in Fig. 13, take note of the thickness of fishplate. Too thick fishplates welded on the rail might catch the trolley, preventing it from passing the joints.

Fig. 13

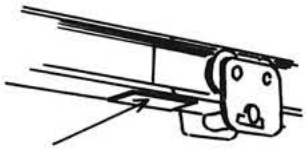

Take note of the thickness of fishplate.

3. Traversing rails should be closely joined with a tolerance of 0.5 mm or less, both horizontally and vertically, and the part of the rail on which the wheels of the trolley travel should be machineground. (Refer to Fig. 14)

Fig. 14

misalignment should be less than 0.5 mm.

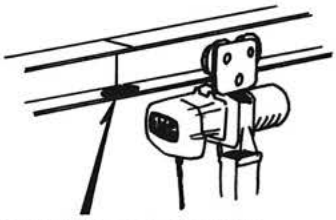

The shaded part of the rail should be machine-ground to be much smoother.

- Accidental release-preventive stopper for the end of the rail:
  1. Fix the stopper with enough space left as indicated by "a" in Fig. 15 so that the electric chain hoist may not hit against a wall or something even if it should strike against the stopper at a high speed and swing forward.

Fig. 15

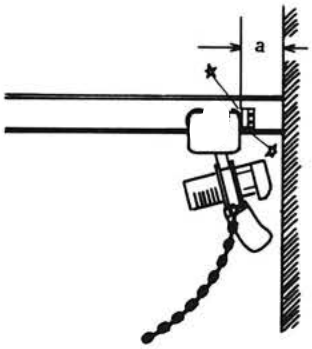

2. Fix the stopper firmly enough to stand impact and then provide it with a shock absorber. (Refer to Table 2 and Fig. 16)

Never use the chain hoist mistakenly installed so that its trolley may always strike against the stopper and thereby get stopped.

Table 2 stopper

| Traversing rail dimensions (mm) | 150x75 | 200x100 | 250x125 | 350x150 | 450x175 |
|---|---|---|---|---|---|
| Angle steel (mm) | 50x50x6 | | | 65x65x6 | |
| A (mm) | 22 | | | 30 | |
| B (mm) | 70 | 105 | 110 | 190 | 280 |
| C (mm) | M12 | M16 | M16 | M20 | M20 |

Fig. 16

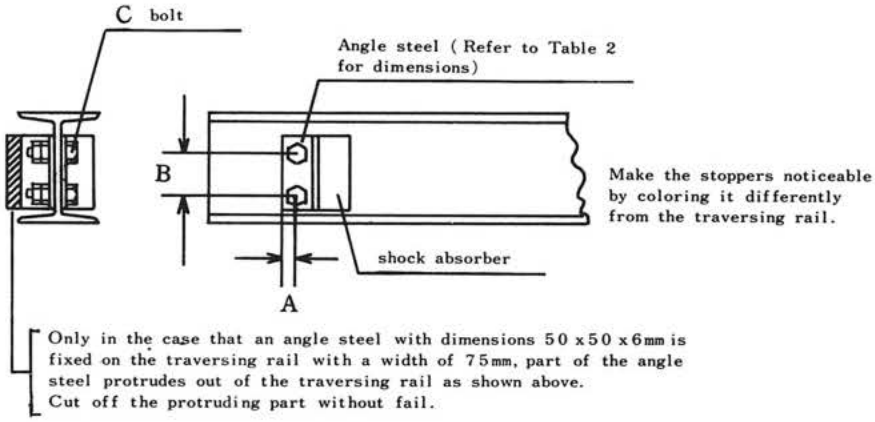

# CHAPTER 2 PRECAUTIONS DURING OPERATION

## 2. 1. Avoid Overloading

Never overload your chain hoist or never put any greater load on your chain hoist than its rated load capacity. Keep this in mind and keep to the regulations on the rated load capacity indicated on each chain hoist.

## 2. 2. Safety Latch

Always keep the safety latch (accidental release-preventive device for lifting slings, etc., which is attached to the top & bottom hooks) in good condition so that it may properly function. Be sure to use it when slinging any cargo. (Refer to Fig. 17)

Fig. 17

## 2. 3. Slinging

### 2. 3. 1. Lifting Sling

Avoid using any lifting sling inferior in quality. Inspect every lifting sling you are going to use before the beginning of operation.

### 2. 3. 2. Safe and Sure Slinging

Perform slinging carefully using a lifting sling adequate both in capacity and in length. Note the load capacity of each lifting sling well enough, and at the same time make sure the sling is not improperly hooked as shown in Fig. 18.

Fig. 18


Improper 1 Improper 2 Improper 3

Explanations for Fig. 18

Improper location of the sling on the bottom hook

1. When a cargo is lifted with the sling improperly located on the hook, it might get out of position while carrying the cargo, causing impact load. Get the cargo down and sling it up again.
2. The angle between the two wire ropes of the sling, indicated by $\theta$ in Fig. 18, is too large, not only the load imposed on the sling increases but the latch might be damaged or the cargo might fall. For proper location, change the slinging points of the cargo, or if there is enough hanging margin, replace the sling by a longer one. Sling the cargo up with the angle $\theta$ being 60° or less.
3. The sling is too thick for the latch to be back in normal position. Change the sling. It would be advisable for you to use slings with metal fittings. ( Ask your dealer. Many kinds of lifting slings are available to improve operational efficiency. )

Avoid binding up the load directly with the load chain irrespective of whether the load is hard or soft. The load chain is comparativery weak against the tension of abnormal direction. ( Refer to Fig. 19)

Fig. 19

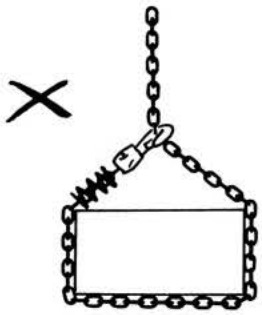

## 2. 4. Lifting after Completion of Slinging

When lifting the load up after completion of slinging:

★ First, check the slinging condition with the load chain and lifting sling stretched tight.

★ Next, check the balance of the load kept floating only inches above the ground.

★ Then, check sure the proper braking of the electric chain hoist by repeatedly winding the load several tens of centimeters up and down several times.

Make it a rule to perform the above-mentioned three important checks before lifting the load high up in the air. ( Refer to Fig. 20 )

Fig. 20

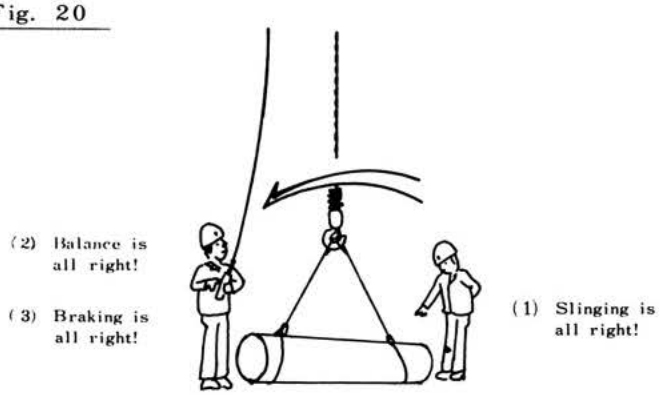

## 2. 5. Side Pulling

Side pulling is very dangerous, so never do that.
With side pulling, the load, dragging on the ground, might start moving fast abruptly and some skew tension might be put on the chain hoist support. ( Refer to Figs. 21 and 22)
Be sure to hoist the load with the chain hoist right above its center of gravity.

Fig. 21

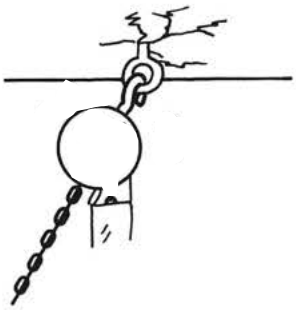

Fig. 22

## 2. 6. Double Hoisting

Avoid hoisting a single cargo with two chain hoists.
Double hoisting, if the load chains are at a wide angle with the vertical line or the center of gravity of the cargo is located extremely close to either one of the two hoisting points as shown in Fig. 23, puts on both or either one of the two chain hoists a more load than is expected. Besides the above-mentioned, a veriety of dangers are supposed to be caused by double hoisting, such as unexpected travelling of the trolley, etc. So, never do double hoisting.

Fig. 23

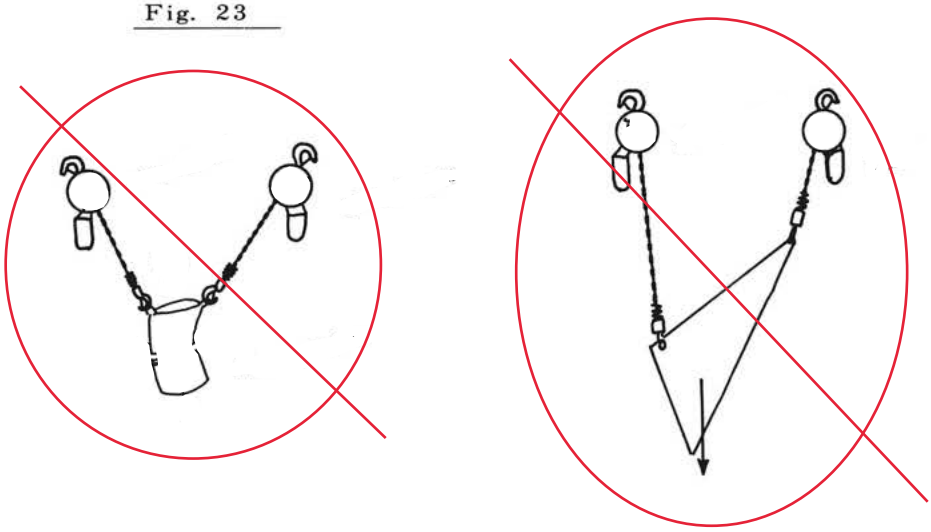

## 2. 7. Plugging

Never press the UP and DOWN push-buttons alternately at too short intervals. ( Refer to Fig. 24 )
This could put on the chain hoist a momentary load more than two times the hanging load, thereby greatly shortening the service life of the chain hoist and load chain.

Fig. 24

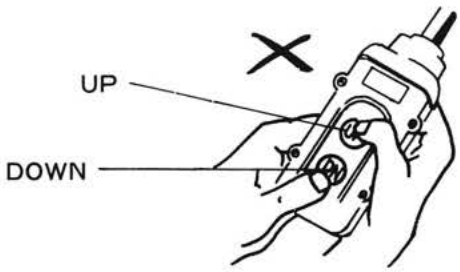


For Reference

The load chain never suffers fatigue failure due to any momentary load within a certain level even if it is frequently subjected to the load; but it could encounter fatigue failure depending on the magnitude of the momentary load and the number of times of load application if the load exceeds a certain level and is repeatedly put on it. ( Refer to Fig. 25 )
Durability of the load chain and hoisting speed are properly determined after repeated tests so that under normal conditions of use and the rated load the momentary load may stay within the above-mentioned level, but the load chain could suffer fatigue failure from repeated overloading or operation of giving impact to the hanging cargo.
When an impact load is put on the load chain ( a small impact load is put on the load chain in usual operation of starting and stopping the chain hoist ), the tension of the load chain, as shown in Fig. 26, changes in a short cycle.
When a second impact is given before the first one starts waning, the change of residual tension, in some cases, overlaps another change, which could bring about an extraordinary magnitude of momentary tension as shown in Fig. 27. The change of tension of the load chain almost wanes in a few seconds, but in plugging, another impact is given before the change of tension caused by the previous impact wanes out, which may possibly put an extremely large momentary load on the load chain.

Fig. 25

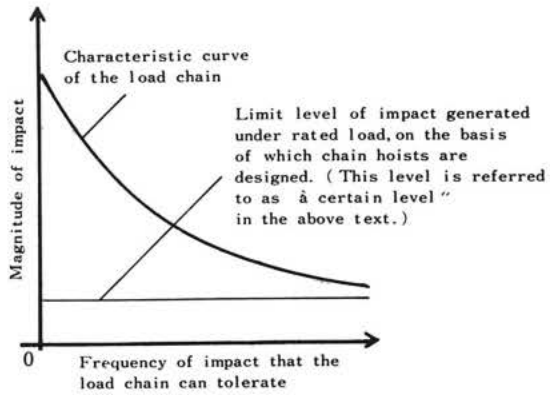


Fig. 26 Tension of the load chain in normal operation

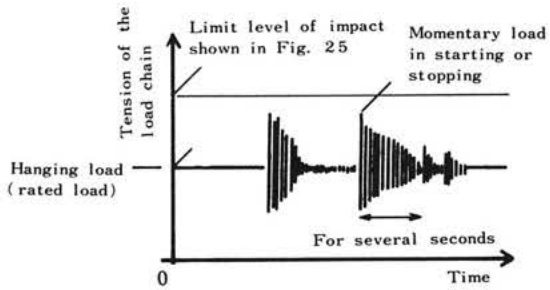


Fig. 27 Tension of the load chain in plugging

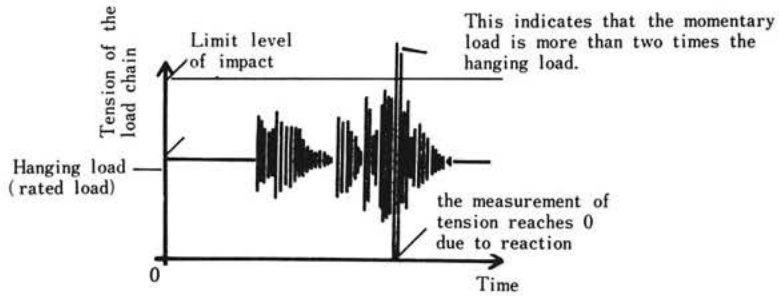


When lifting a cargo weighing more than 60% of the rated load capacity of your electric chain hoist, never put it in plugging operation.
And when the work you are going to do is expected to need plugging with a certain load ( X kg) hanging, you should use an electric chain hoist with a rated working load capacity of more than X x 1.7 kg.

## 2. 8. Inching and Collision of Cargo in Travelling

Inching (Operation of momentary switching on and off by repeated pressing on the push-button for inch-by-inch hoisting, lowering or travelling) and collision of a hanging cargo in travelling should be avoided, because they generate on the load chain a greater momentary load than the one in normal use.
Inching also shortens the service life of the contacts of electric parts.
If it is needed to frequently inch the cargo up and down for exact positioning, etc., use a dual-speed type electric chain hoist.

## 2. 9. Handing of the Pendant Push-Button Panel and Its Cord

Press down each push-button fast and securely so that its contacts may touch each other well enough.

★ Dual-speed type electric chain hoiost

The push-buttons of a dual-speed type electric chain hoist are of two-step type: the 1st step for Low Speed and the 2nd step for High Speed.

After operation be careful to release the pendant push-button panel right under the chain hoist. This will prevent accidental damage to the panel or malfunction. (Refer to Fig. 28)

Fig. 28

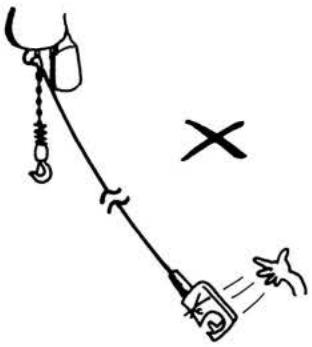

Never use any pendant push-button panel that has been cracked, heavily stained, or lacks some component part.
This could lead to electric shock or malfunction.

## 2. 10. Keep away from under Any Hanging Cargo

Never stand nor put your arms and legs under any cargo hung by the electric chain hoist. (Refer to Fig. 29)

Fig. 29

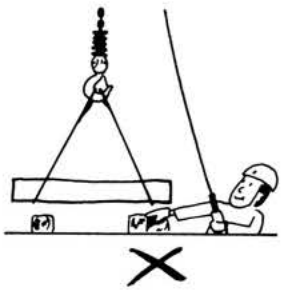

## 2. 11. Never Leave Any Cargo Hanging on the Chain Hoist

The chain hoist operator should never leave the operating position while lifting a cargo with the electric chain hoist. When a cargo is up on the chain hoist, some qualified person or other in charge of operation should be responsible all the time for the safety of the cargo and its surround-ings (Refer to Fig. 30)

Fig. 30

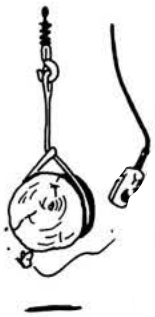

## 2. 12. Condition of the Load Chain

Make sure that the load chain is not knotted or entangled.
Remove tangles or knots, if any, from the load chain before use.
Also remove kinks, for the double or more fall type chain hoist, fromthe load chains before use. (Refer to Figs. 1 to 3)
Pay close attention to the oiled condition of each load chain and when any load chain has got insufficiently oiled, oil it at once. (Refer to Fig. 31)

Fig. 31

Oil the entire load chain as frequently as possible.

Use most suitable oil depending upon the installation location of your chain hoist:

Use oil with low viscosity in the location where sand, mud, iron powder, or other foreign matter is liable to adhere to the load chain.

Use grease in the location that must not be stained with oil drop.

(Waste oil, if foreign matters, such as iron powder and dust, are removed from it, which is not volatile can also be used for conditioning of the load chain.)

Various kinds of load chains subjected to rust-preventive treatment are available to be provided for the location on the coastal area where rusting is greatly accelerated.

If you need them, contact your dealer.

Never fail to oil even these load chains for prolonged wear-resisting life. Oiling or no oiling means the difference of more than several tens of times in service life of the load chain.

## 2. 13. Precautions for the Chain Hoist with Trolley During Operation

### 2. 13. 1. Never Pull the Cord of the Pendant Push-Button Panel when Moving the Trolley

Never move the trolley by pulling the cord. (Refer to Fig. 32)

Fig. 32

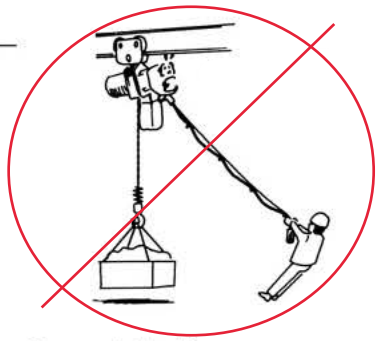

### 2. 13. 2. Hand Chain of the Geared Trolley

The hand chain of the geared trolley can be caught and pulled tightly by a hanging cargo, hooks on the loading body of a truck, etc. to cause deformation and dropping of the trolley.
Pay good attention to the hand chain of the geared trolley. (Refer to Fig. 33)

Fig. 33

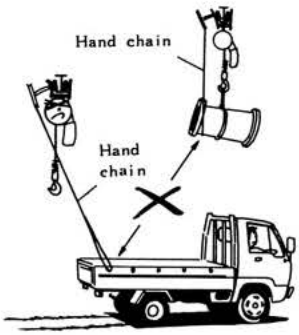


### 2. 13. 3. Halt the Trolley before It Hits the Stopper

Never allow the trolley to hit the accidental release-preventive stopper. (Refer to pages 17 and 18) Operate the trolley with due care, especially near the stopper, so that it may halt automatically before it hits the stopper. (Refer to Fig. 34)

Fig. 34